HIETAKARI®

CE

8/25 9VRLM

FORMA

[ ]301 [ ]302 [ ]303 [ ]304 [ ]305

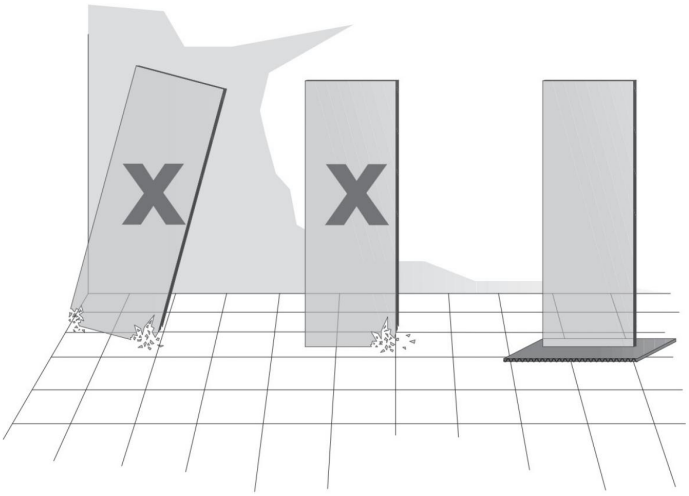

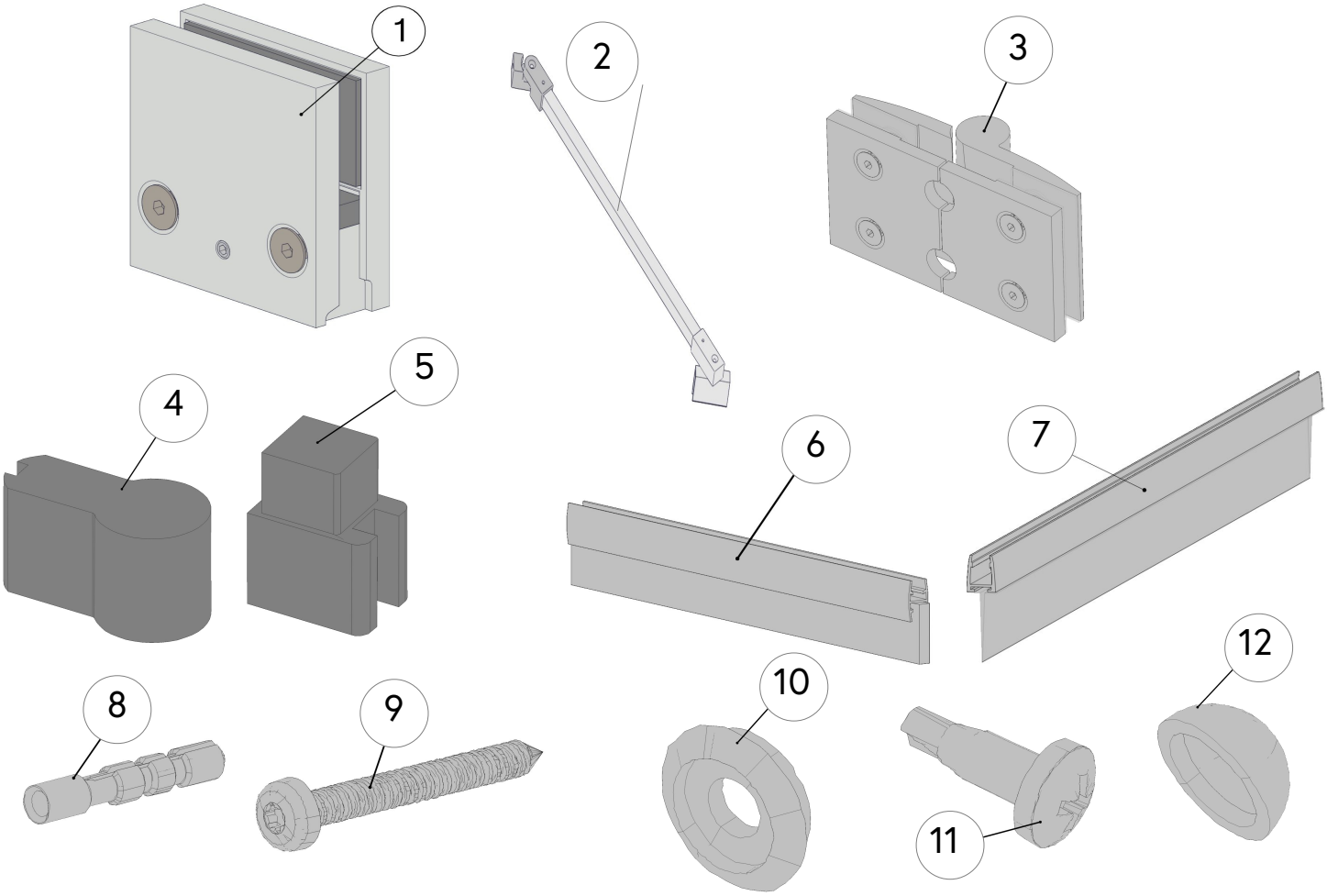

PART	301	302	303	304	305
1	x 1			x 1	x1
2	x 1			x 1	x1
3			x 2		x2
4		x 1	x 1	x 1	x1
5	x 1			x 1	x1
6	x 1			x 1	x1
7		x 1	x 2	x 1	x2
8	x 7	x 4	x 4	x 7	x7
9	x 7	x 4	x 4	x 7	x7
10	x 4	x 4	x 4	x 4	x4
11	x 4	x 4	x 4	x 4	x4
12	x 4	x 4	x 4	x 4	x4

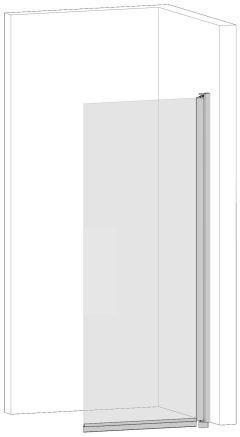

FORMA 301 _____ 4
FORMA 302 _____ 8
FORMA 303 _____ 11
FORMA 304 _____ 15
FORMA 305 _____ 20

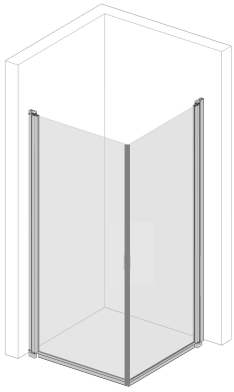

FORMA 30X x 30X _____ 25

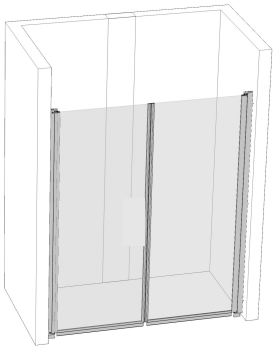

FORMA 30X + 30X _____ 27

301

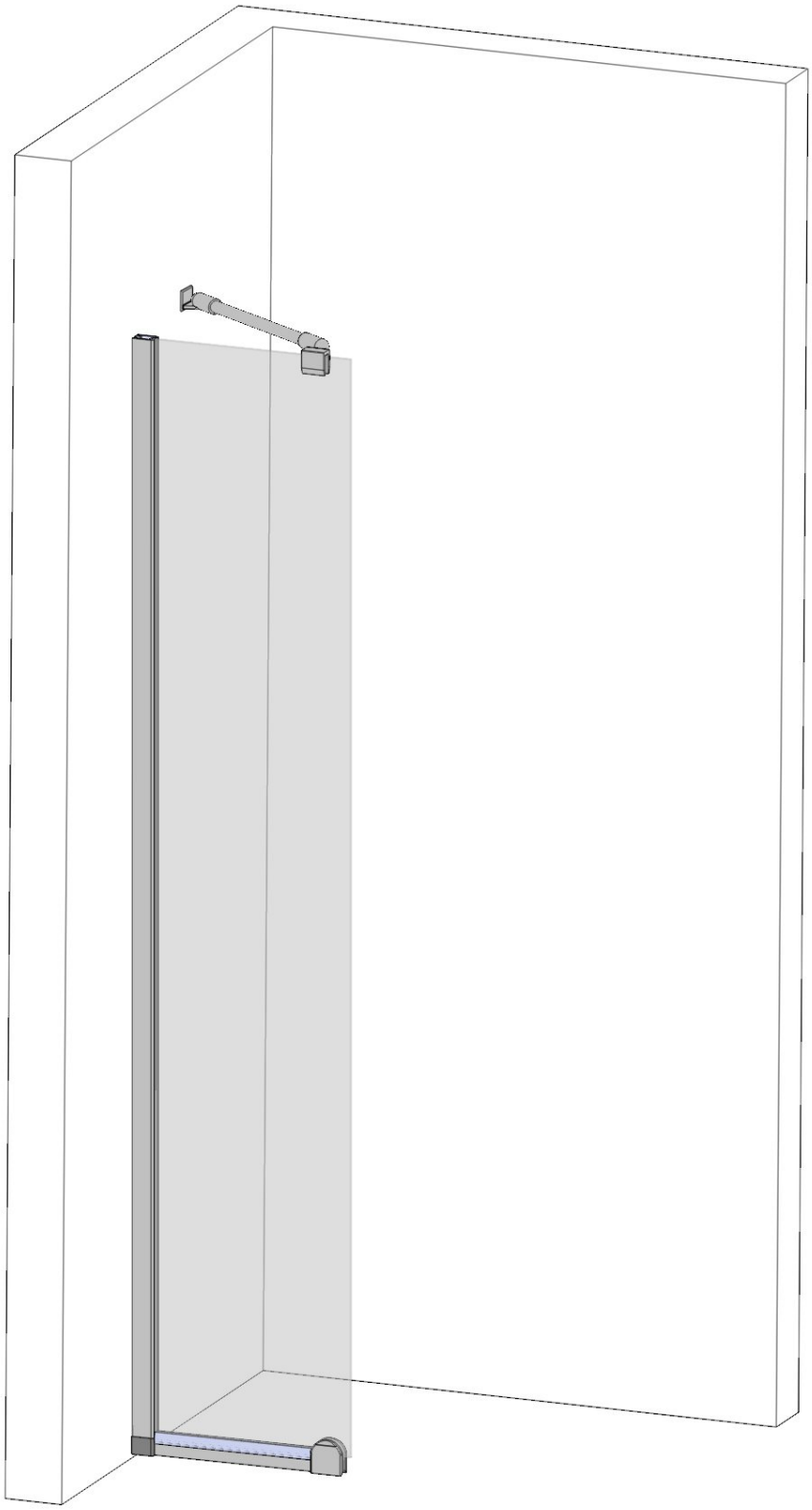

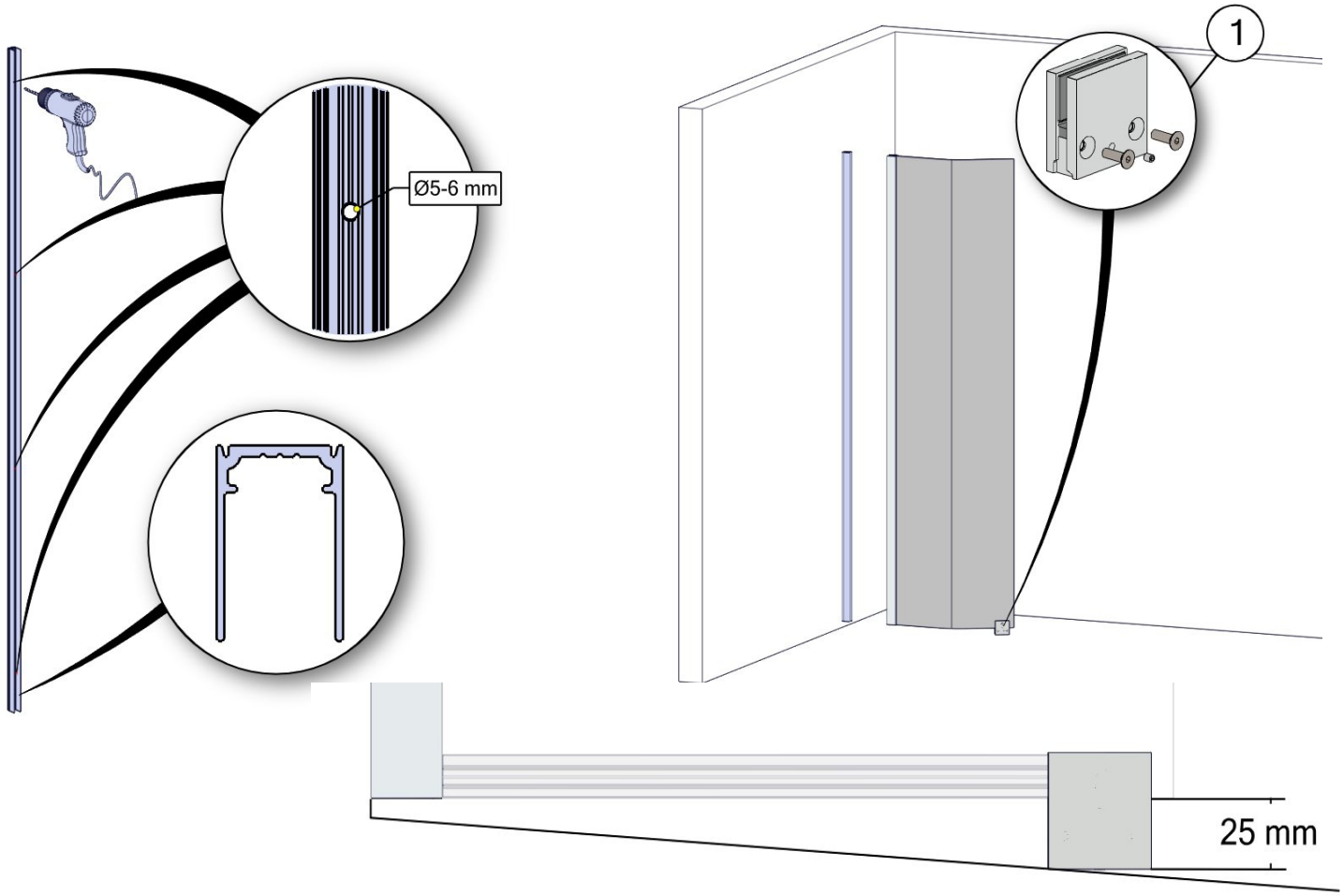
Ø5-6 mm
1
25 mm

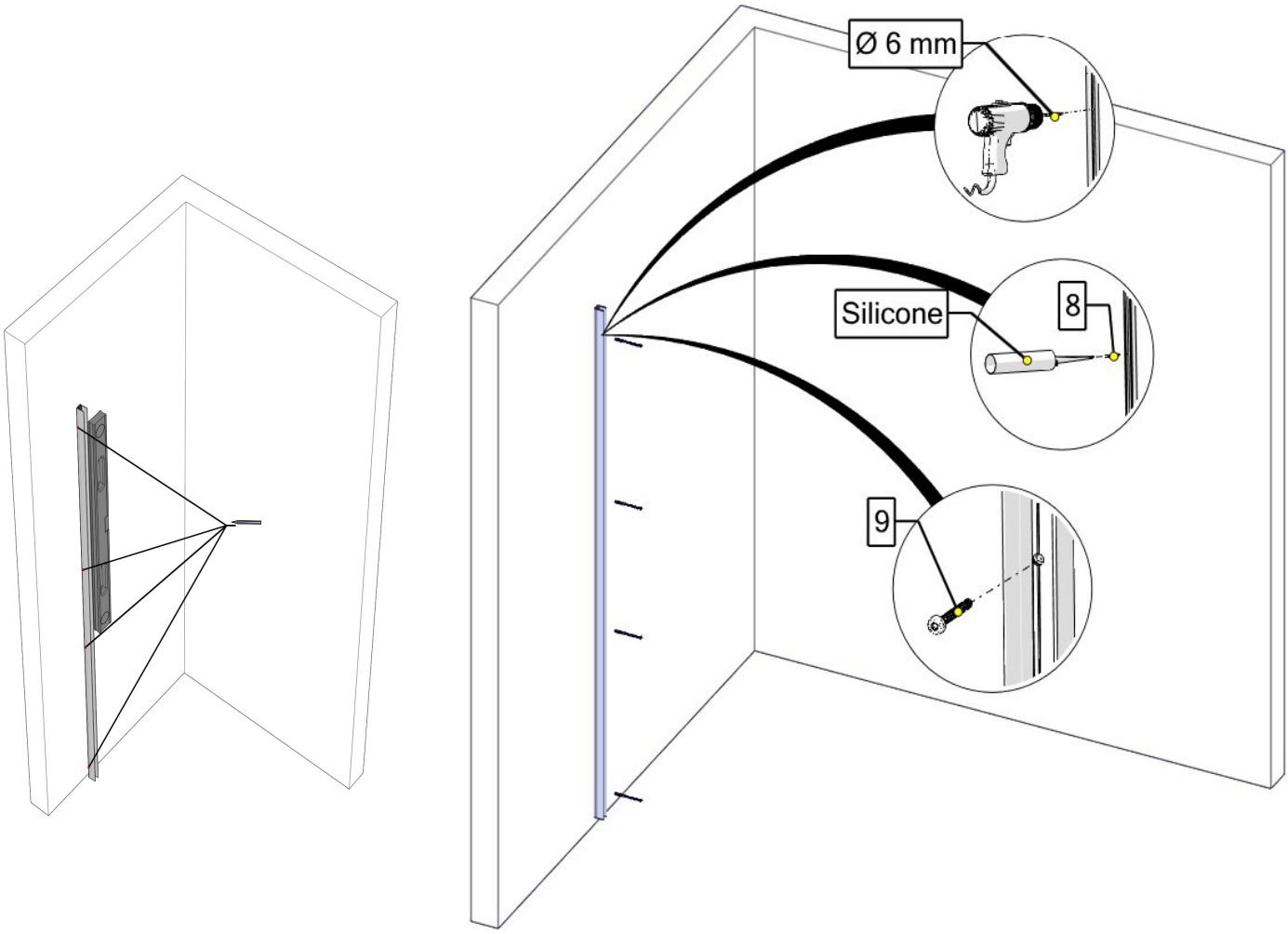
Ø 6 mm
Silicone
8
9

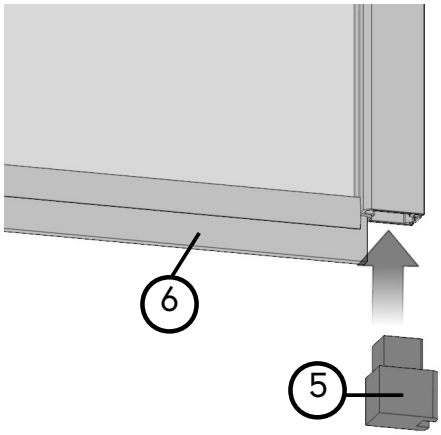
6
5

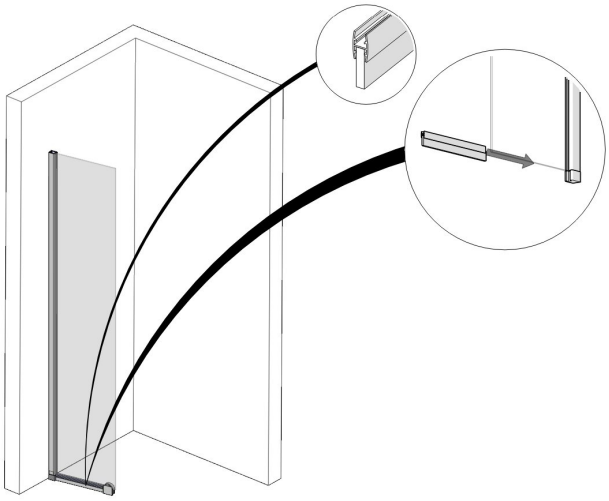

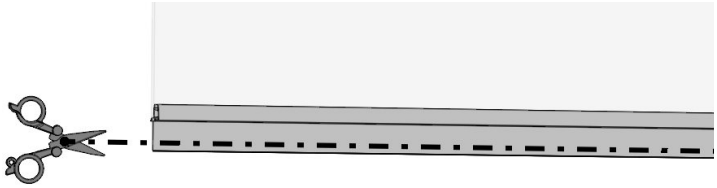

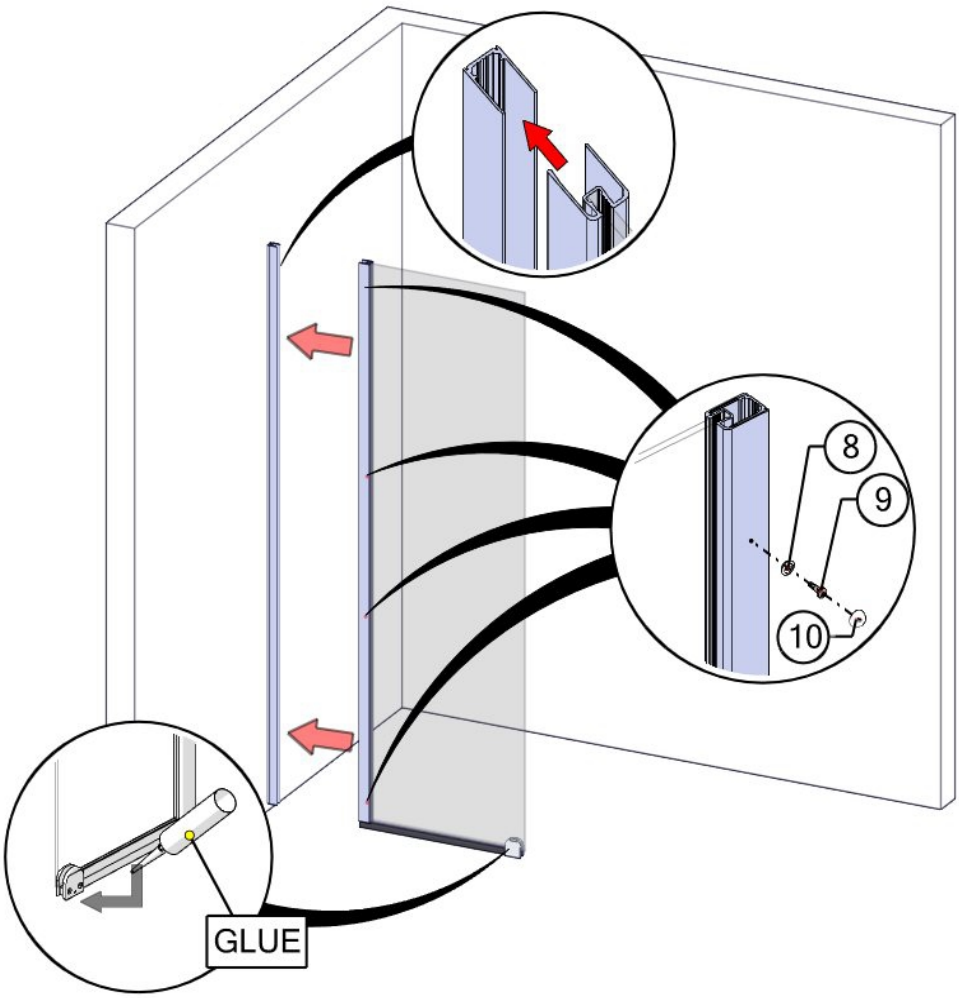
8
9
10
GLUE

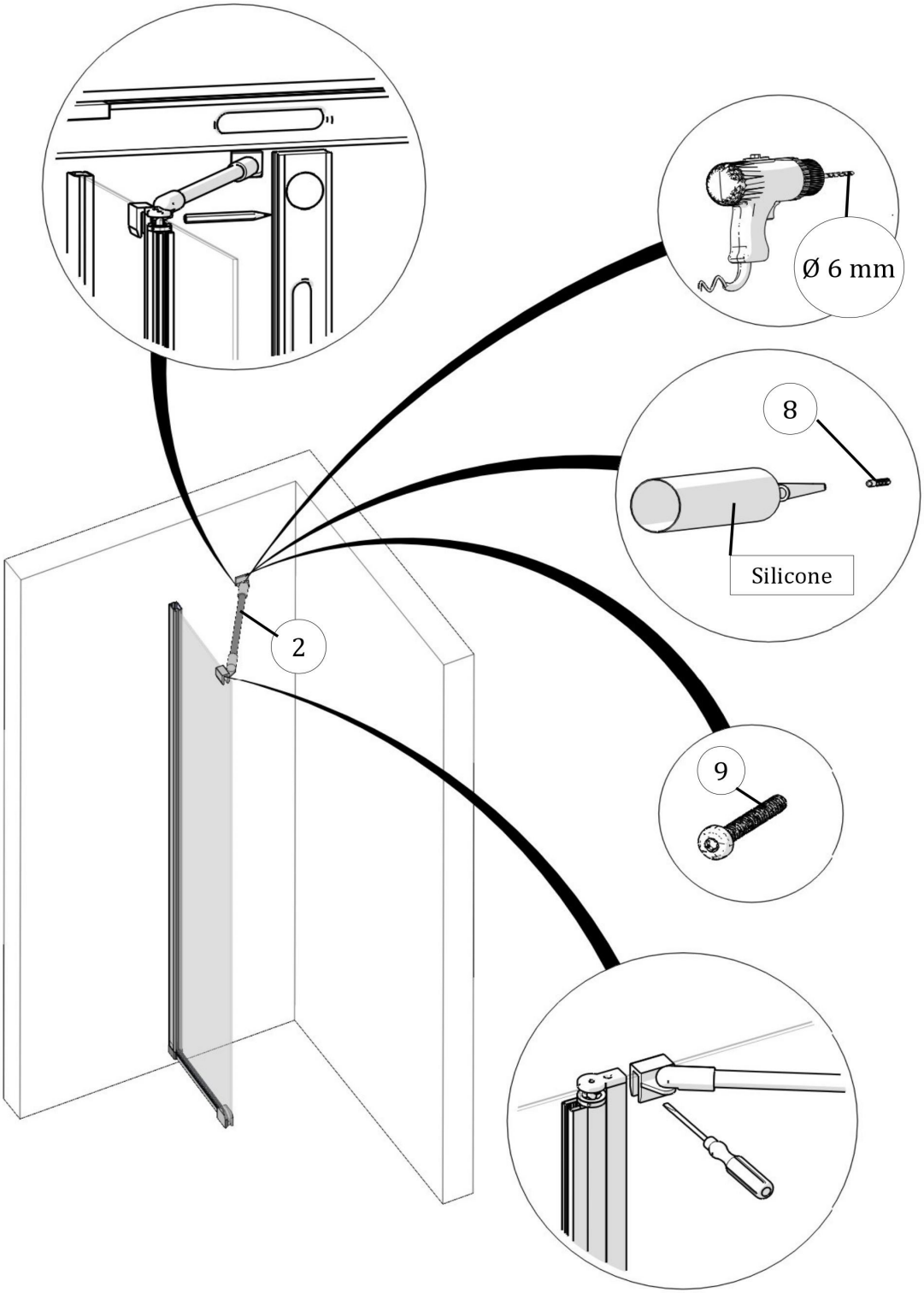
Ø 6 mm
8
Silicone
2
9

302

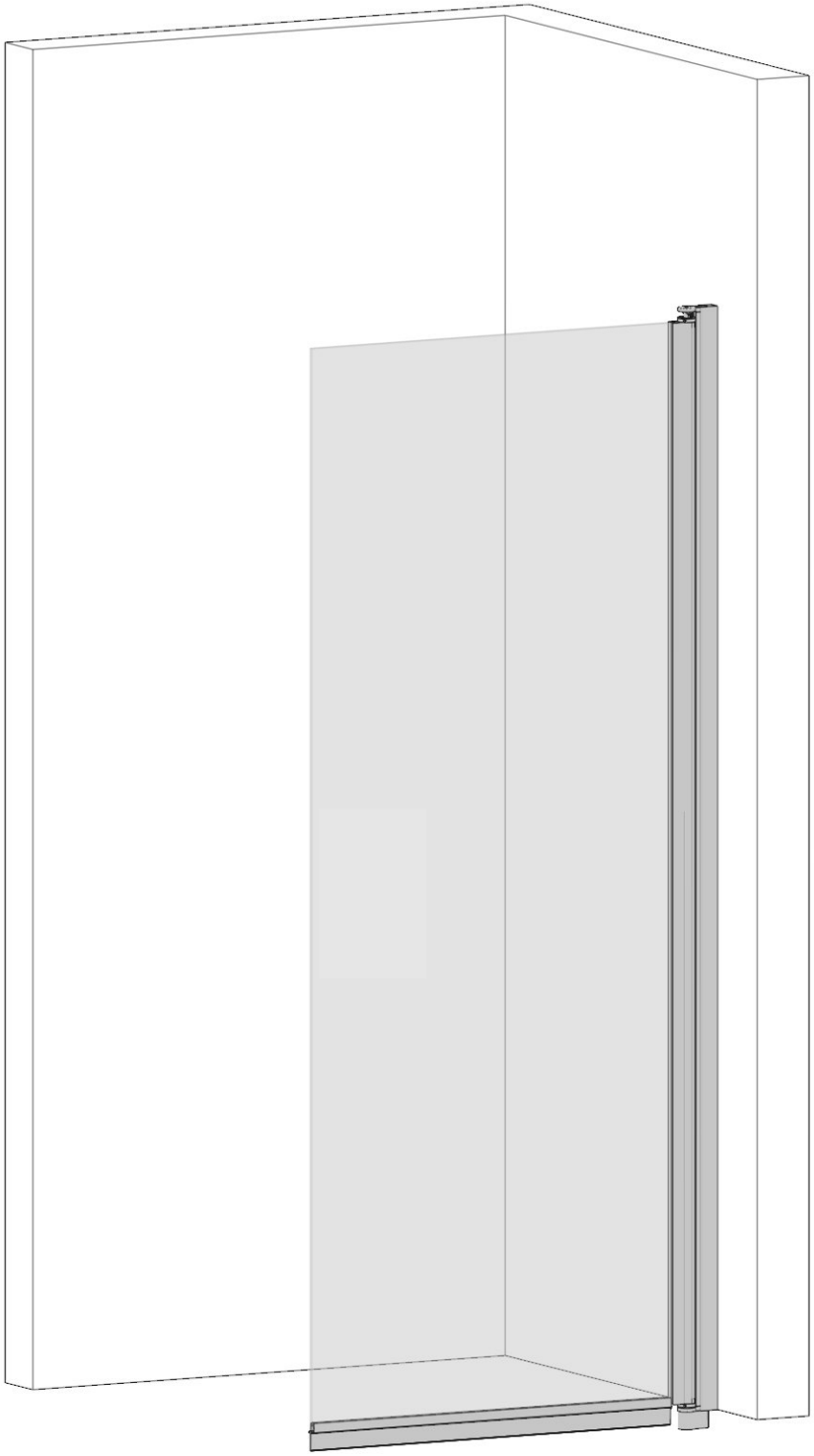

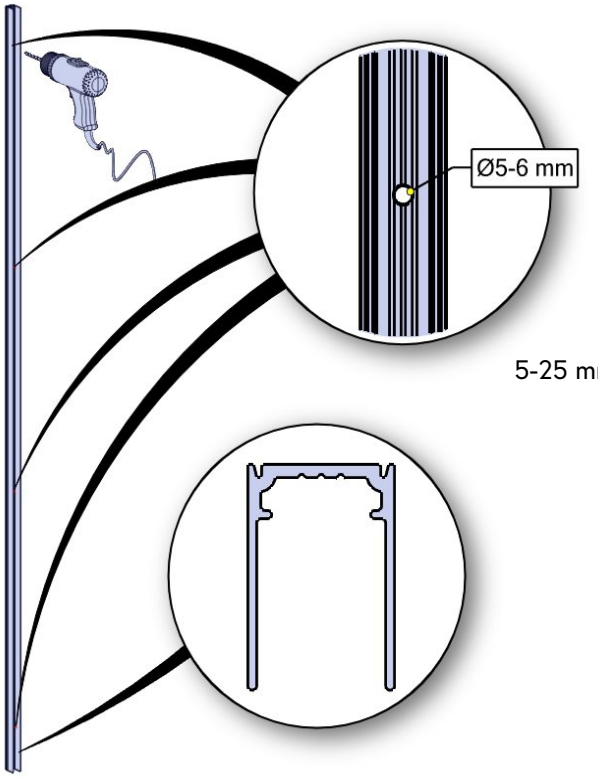
Ø5-6 mm

5-25 mm

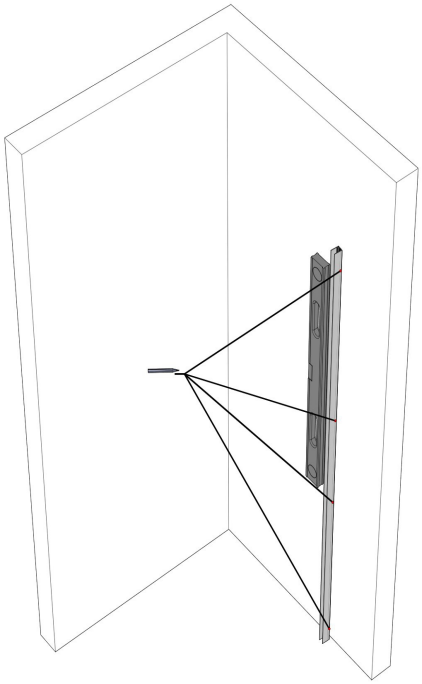

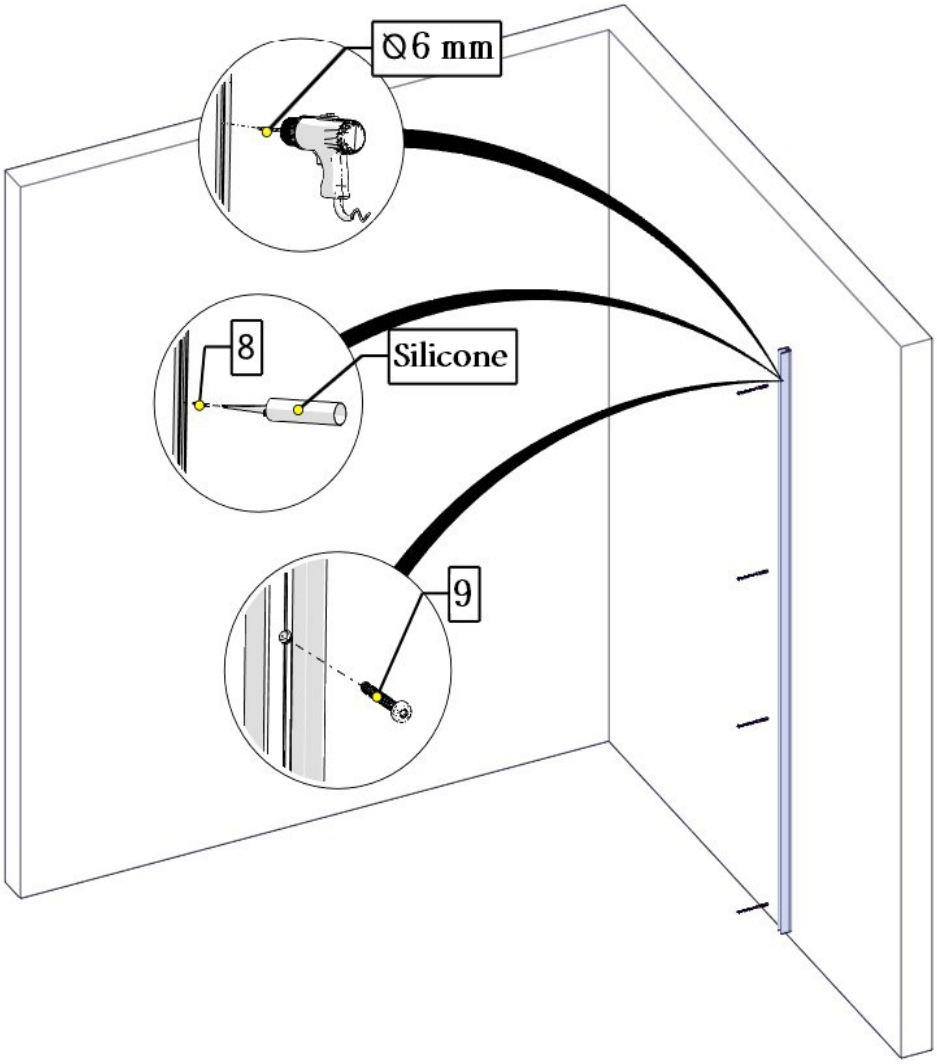
Ø6 mm
8
Silicone
9

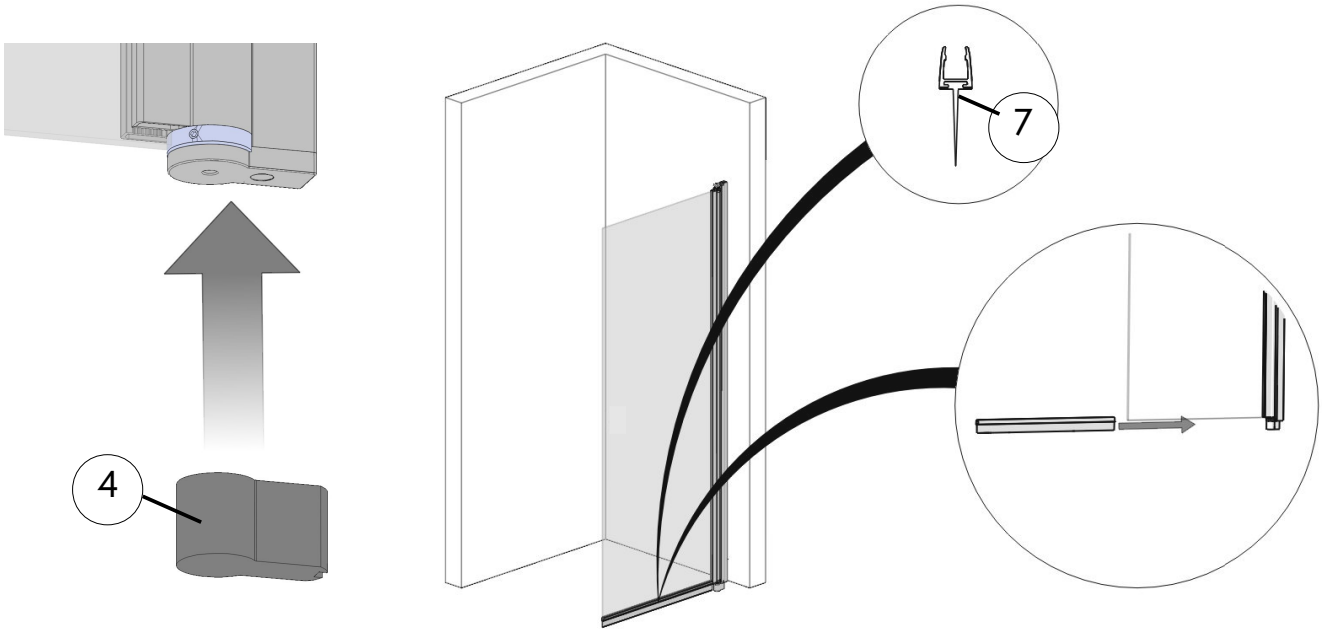
4
7

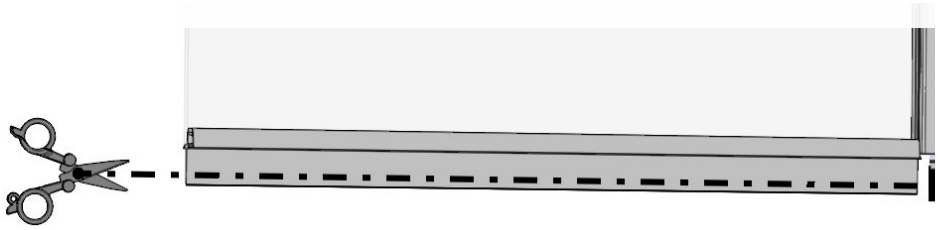

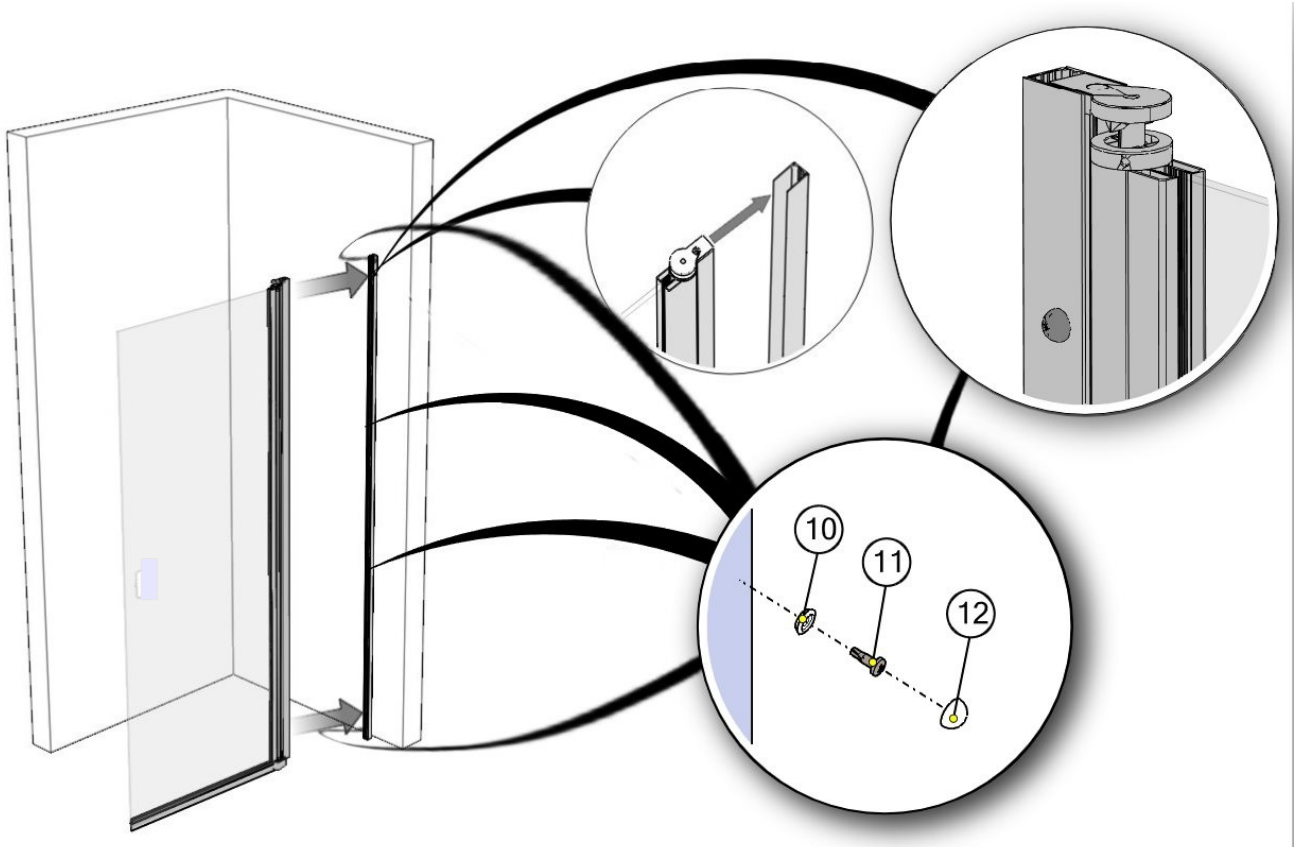
10
11
12

303

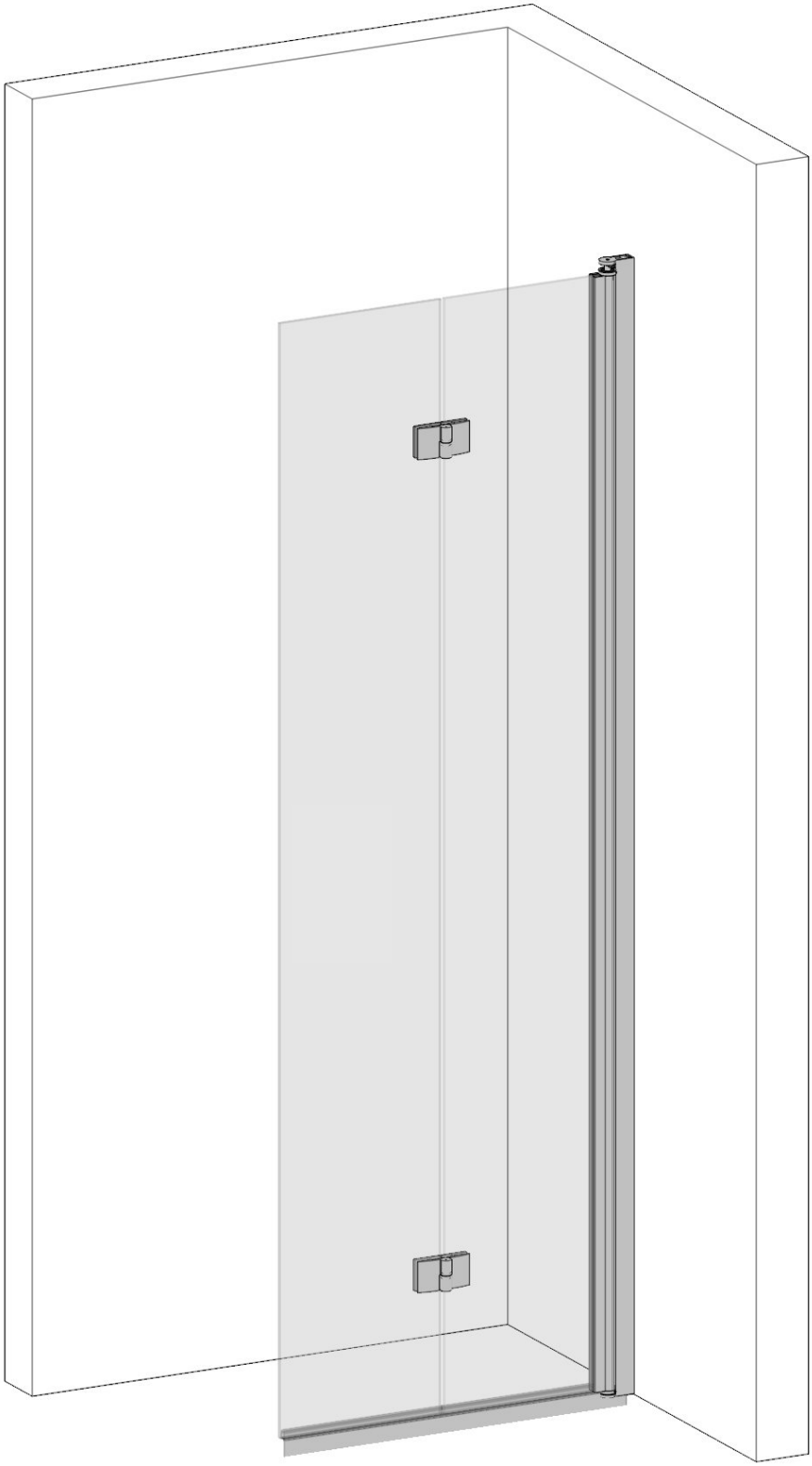

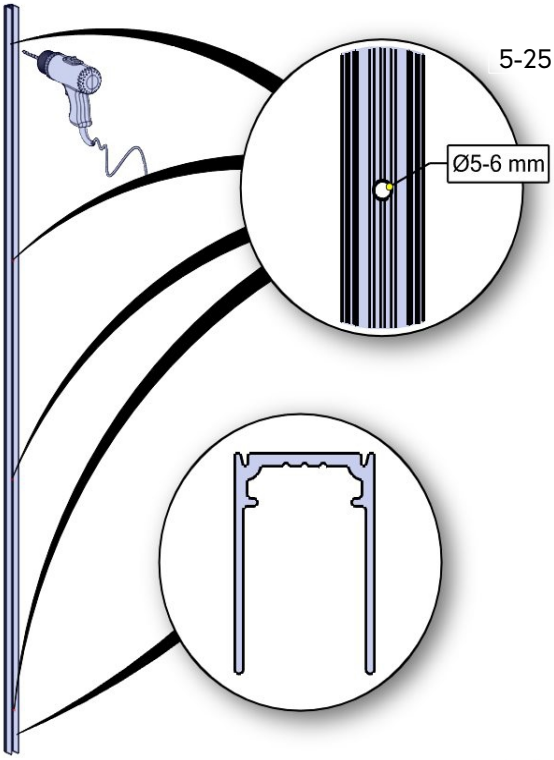
Ø5-6 mm

5-25 mm

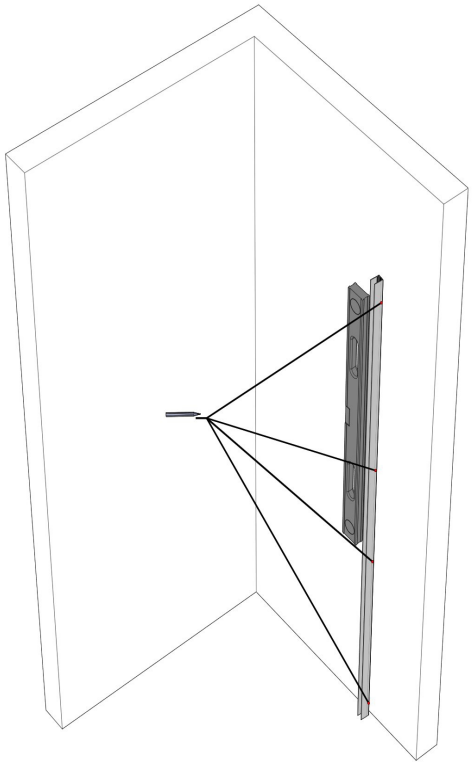

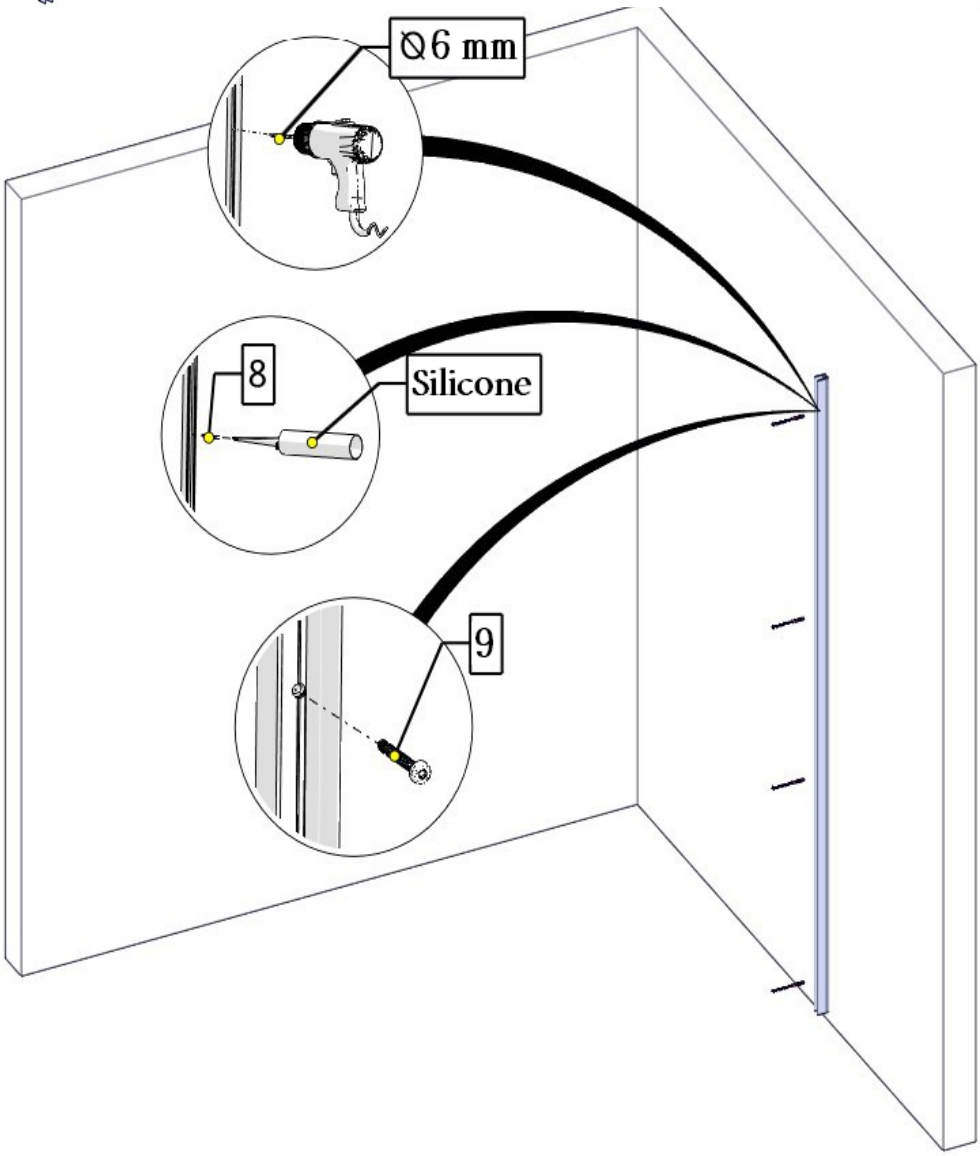
Ø6 mm
8
Silicone
9

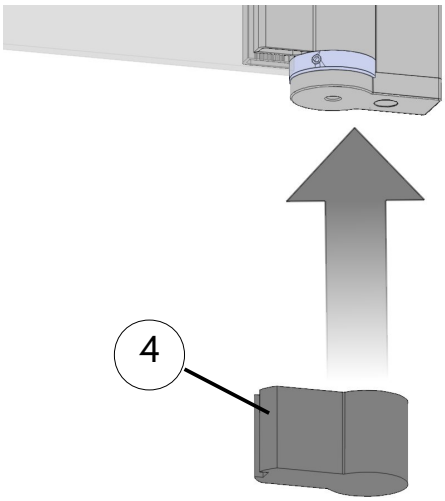
4

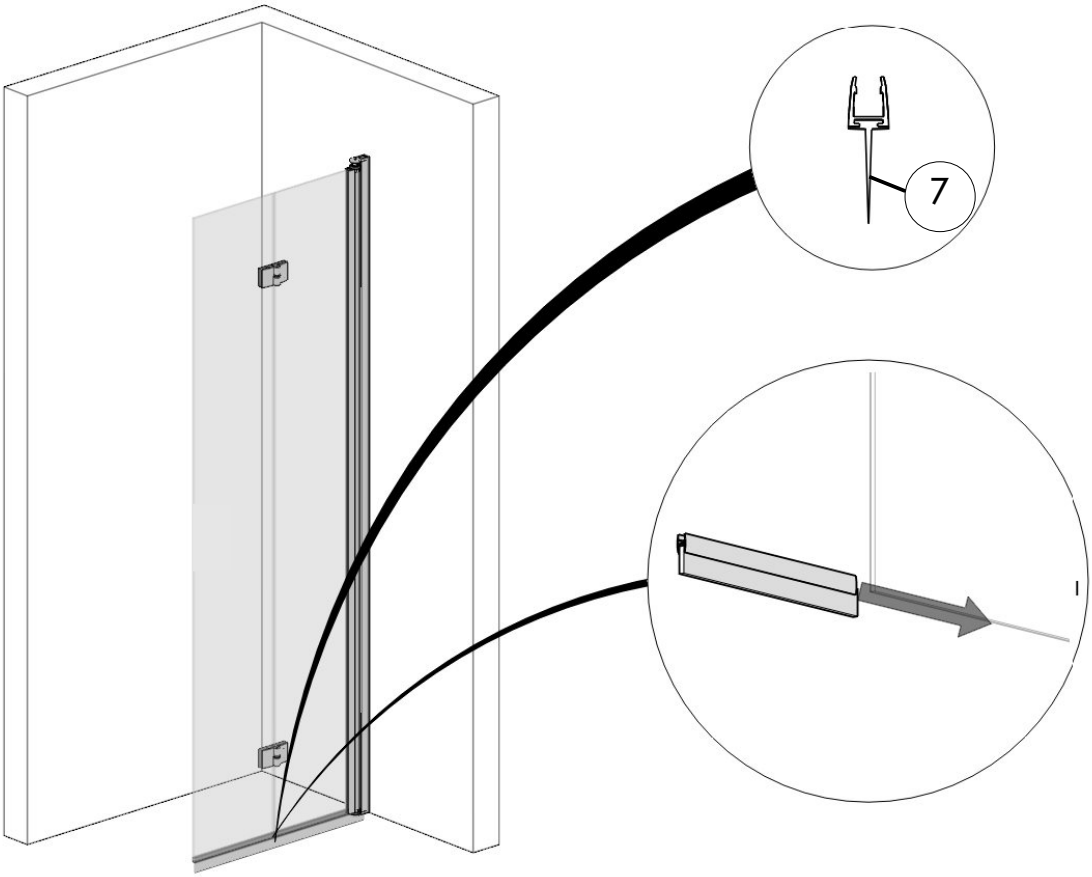
7

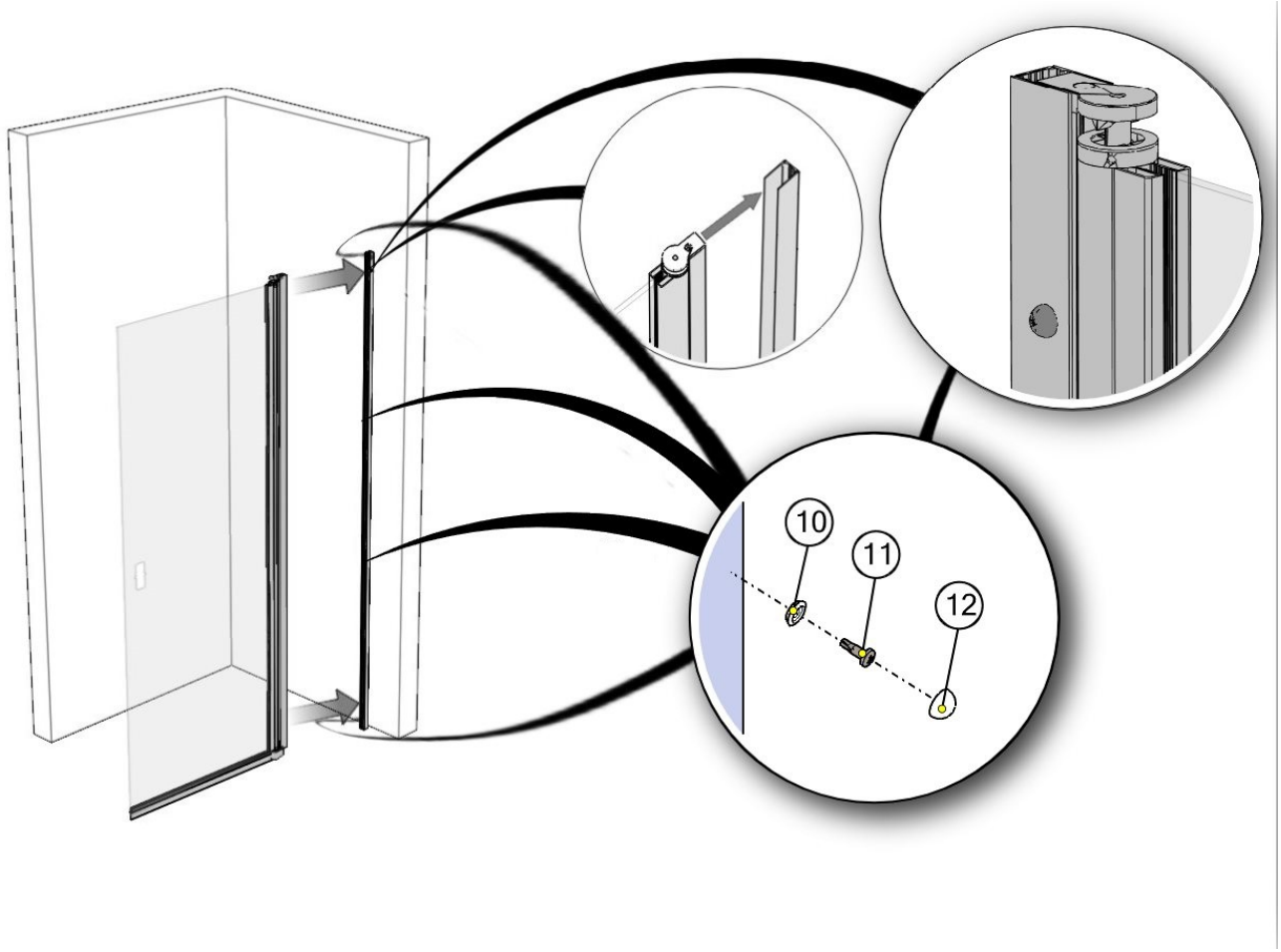
10
11
12

304

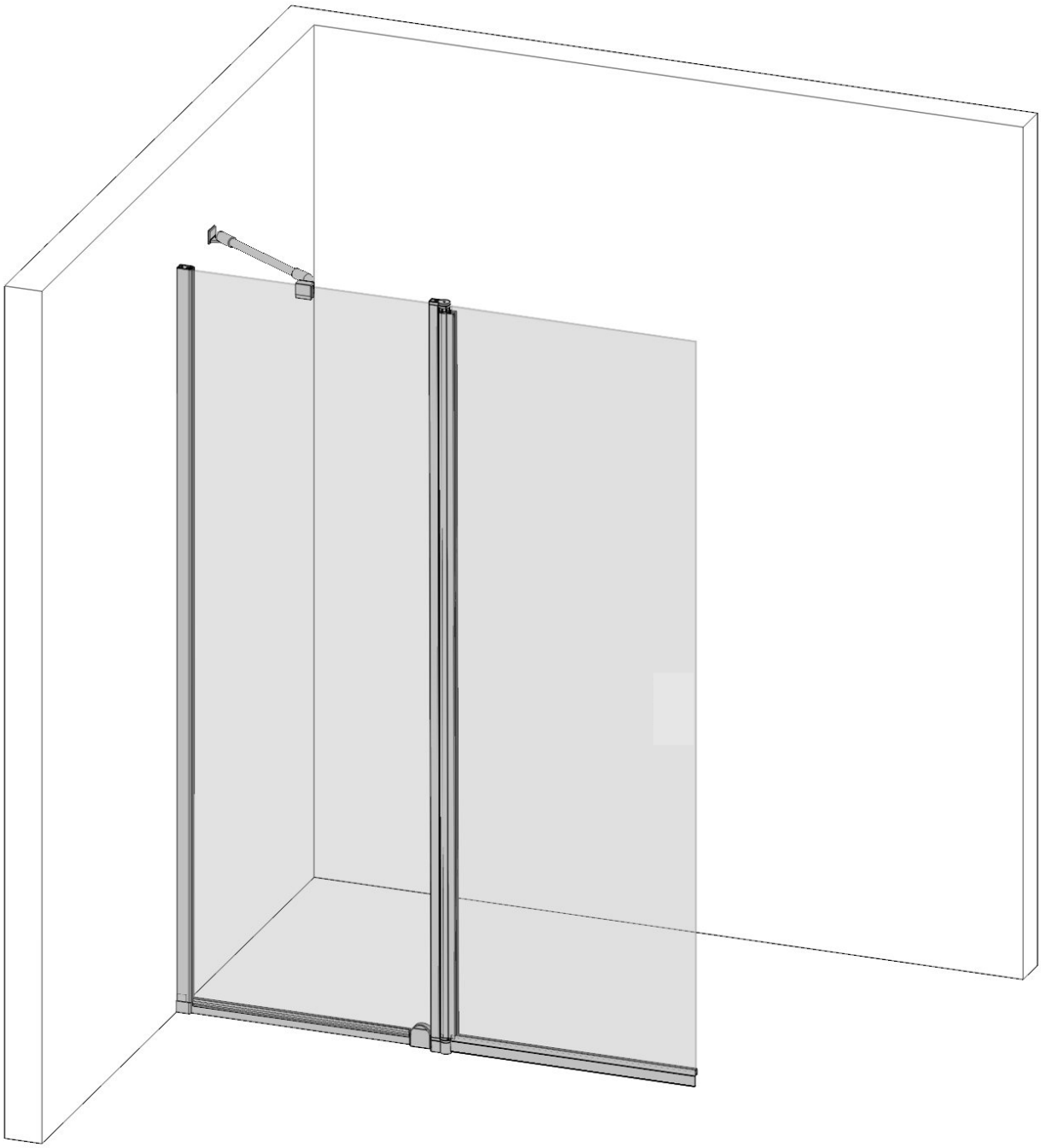

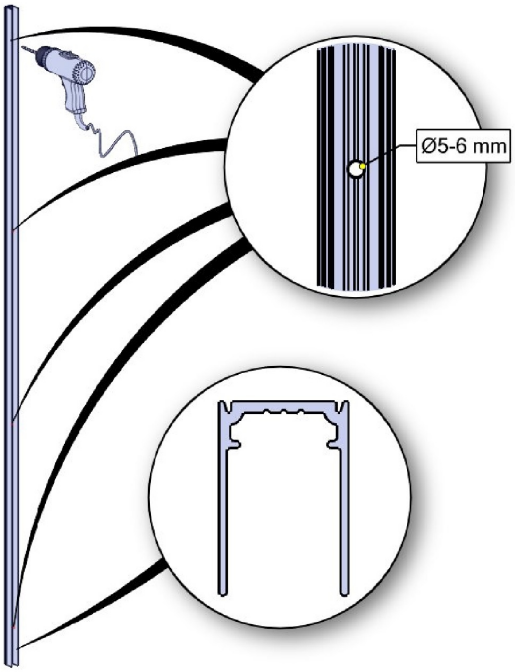
Ø5-6 mm

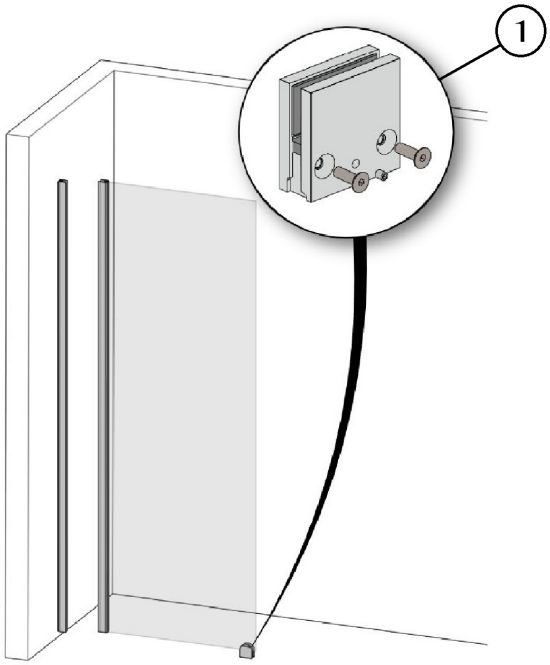
1

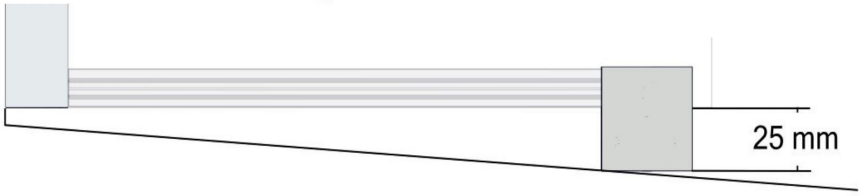
25 mm

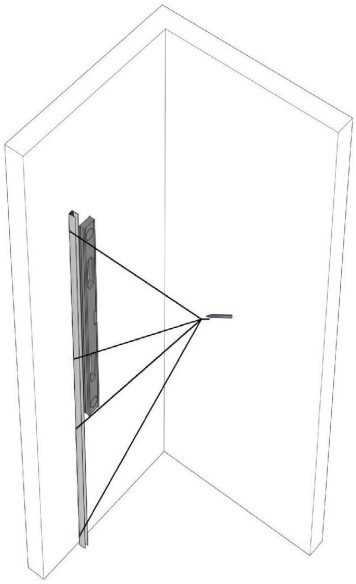

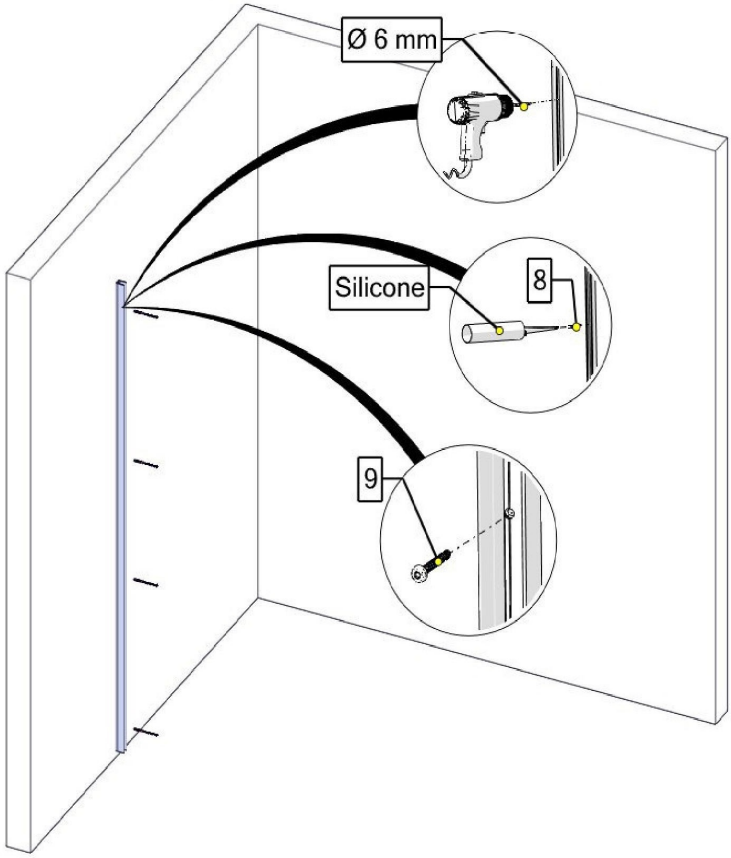
Ø 6 mm
Silicone
8
9

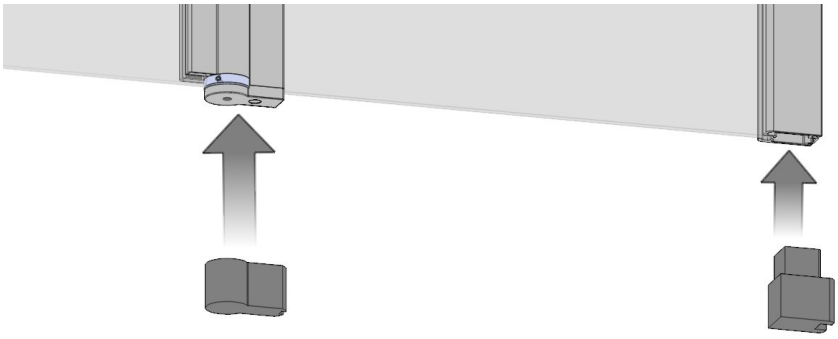

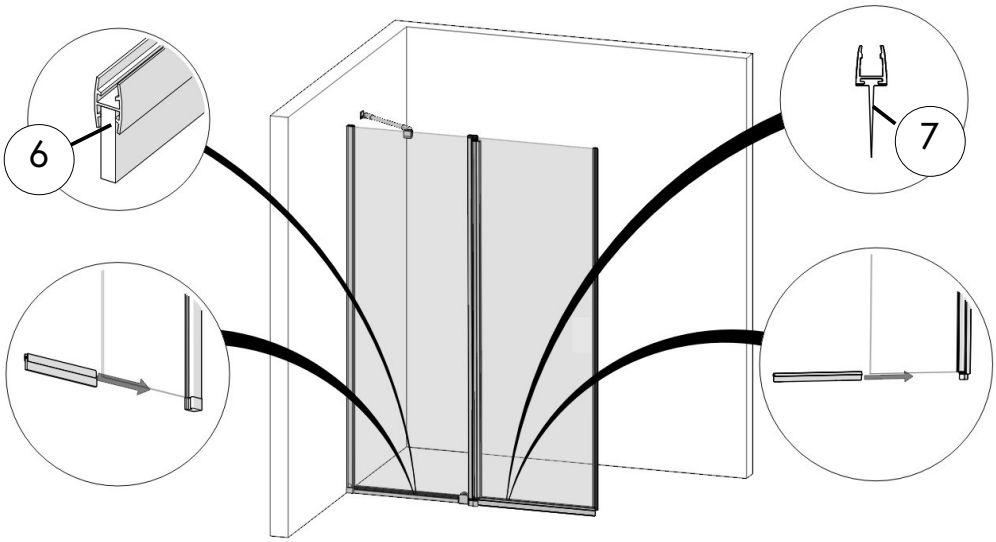
6
7

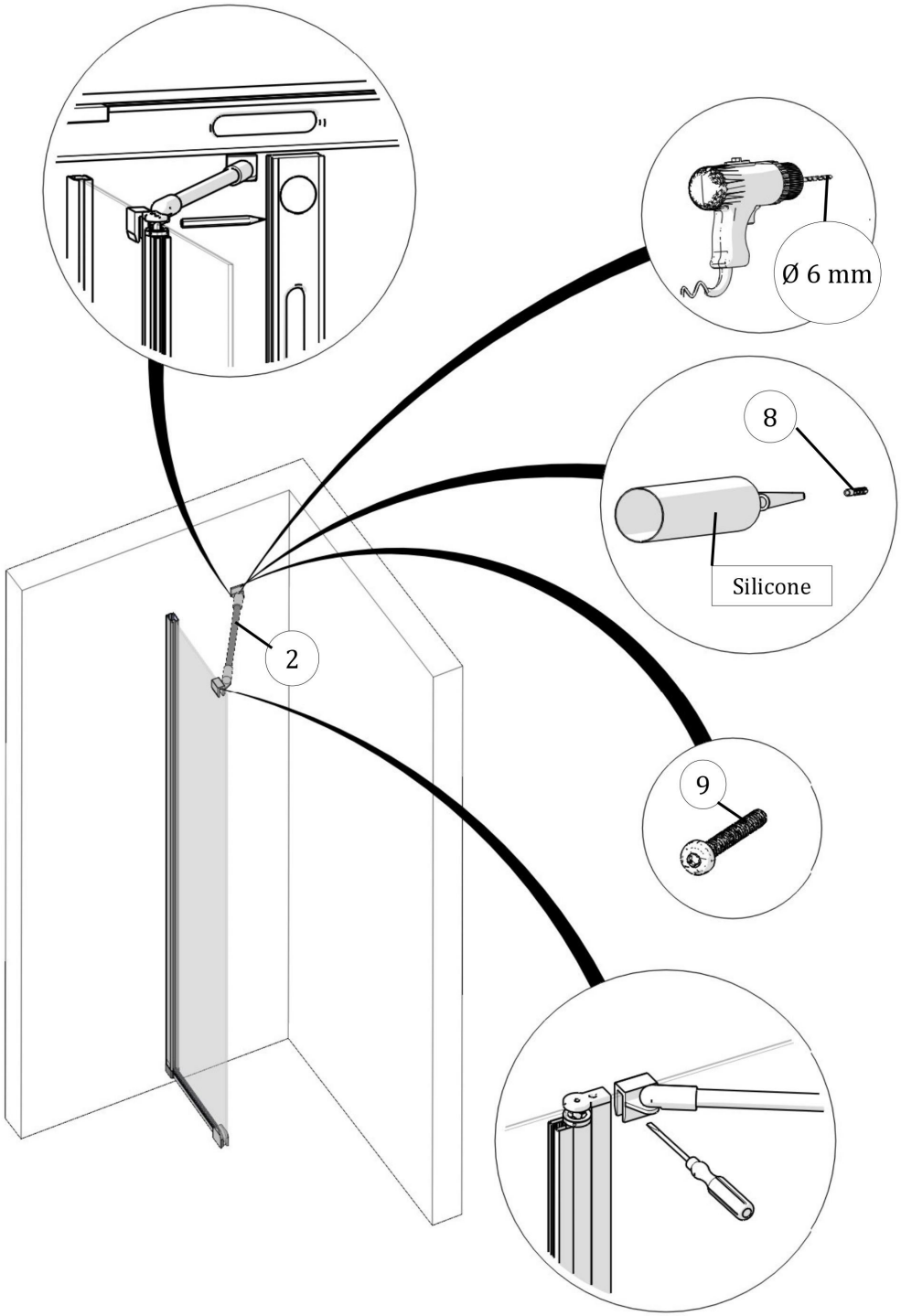
Ø 6 mm
8
Silicone
2
9

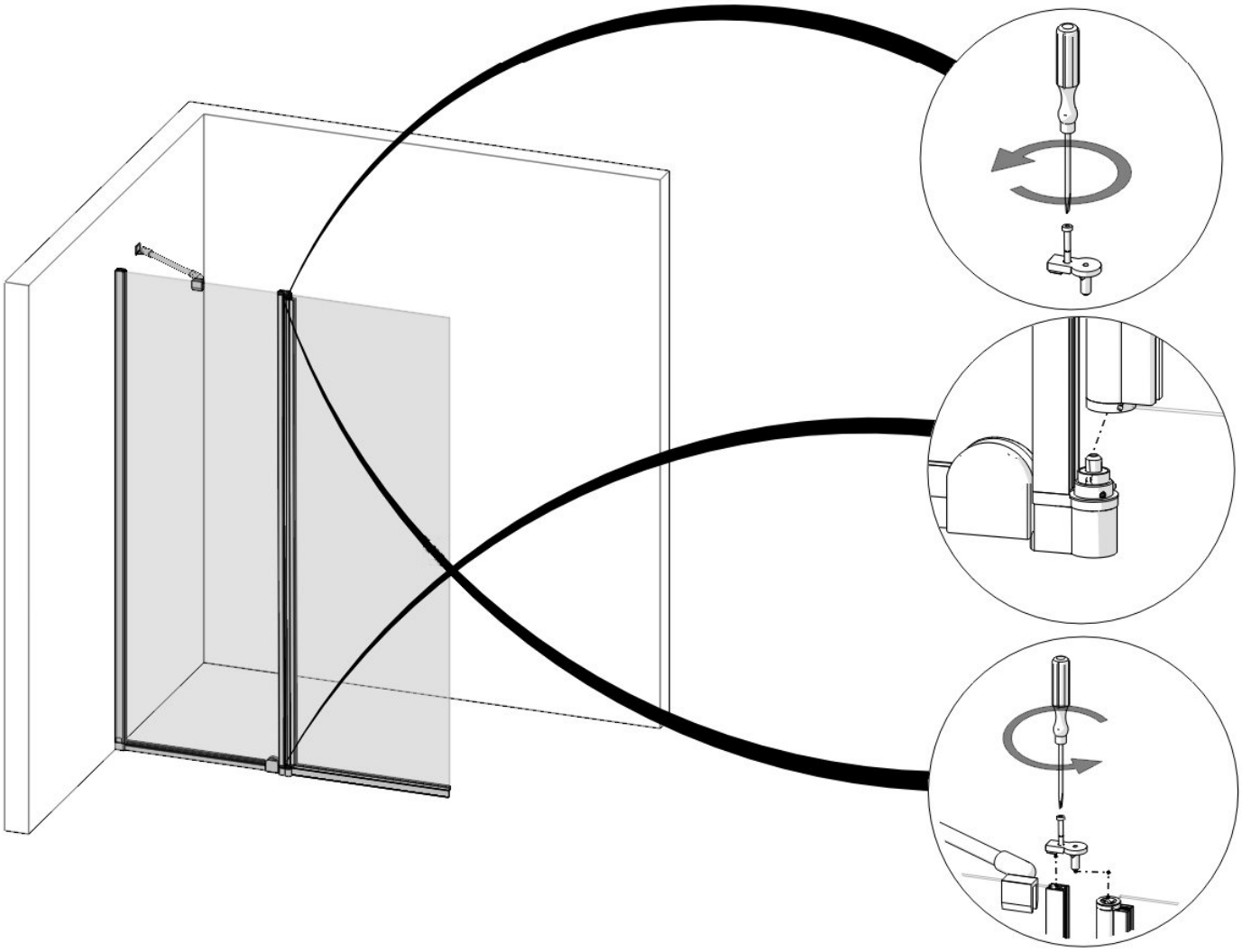

305

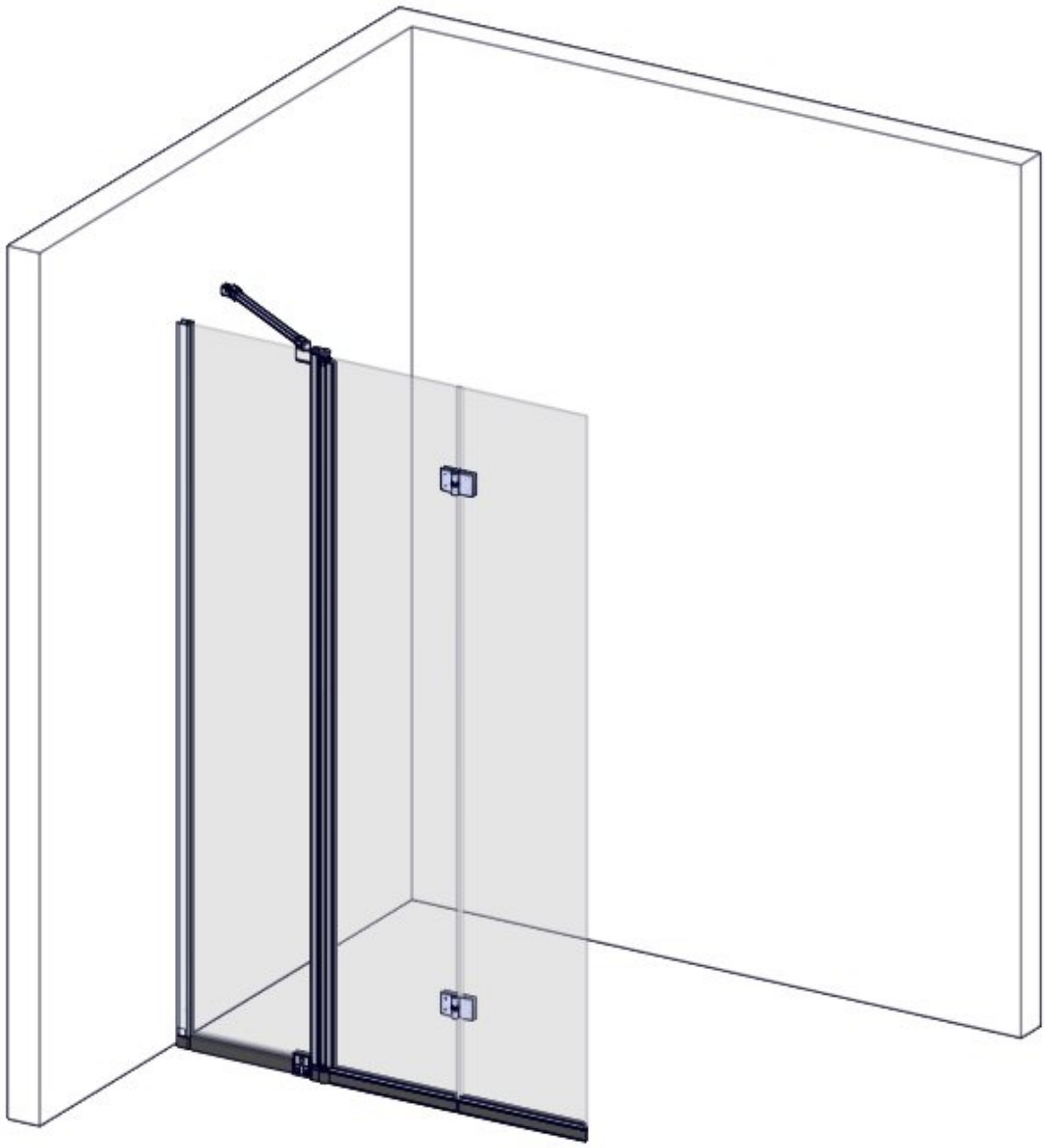

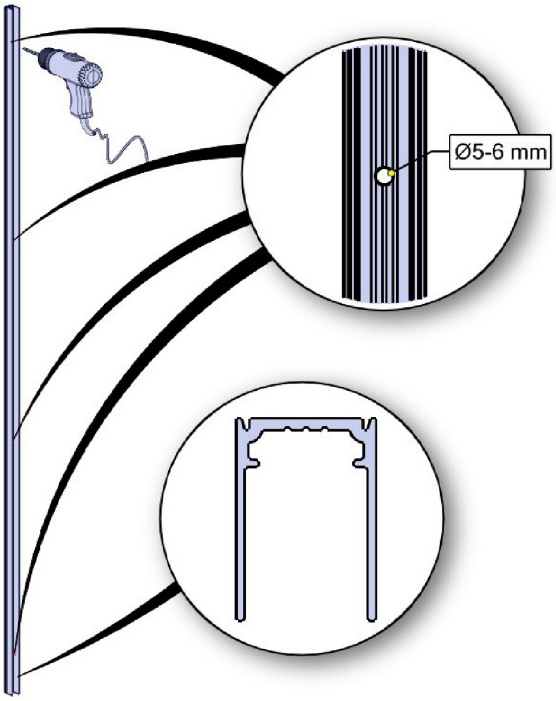
Ø5-6 mm

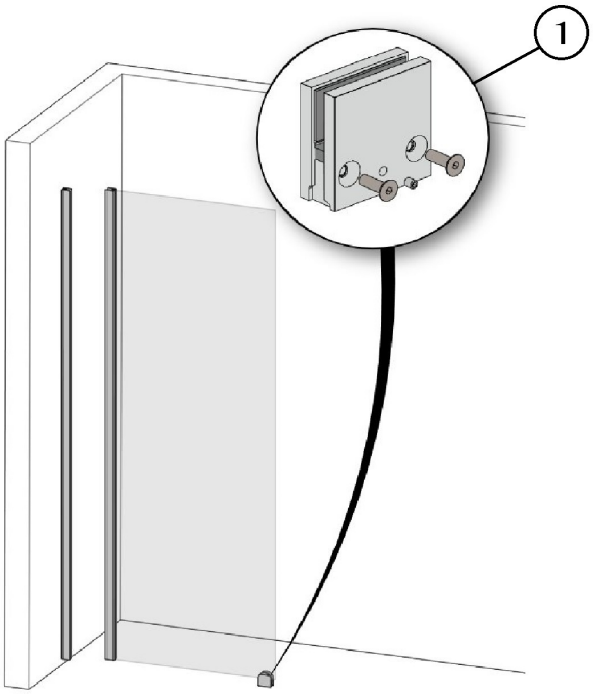
1

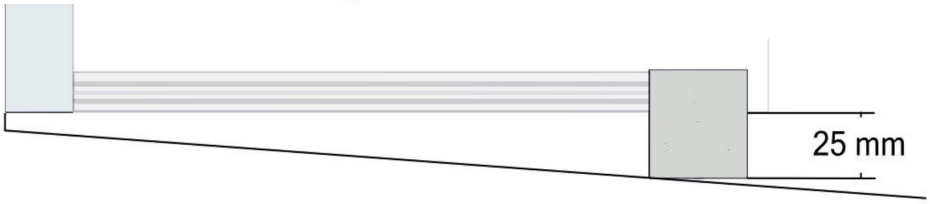
25 mm

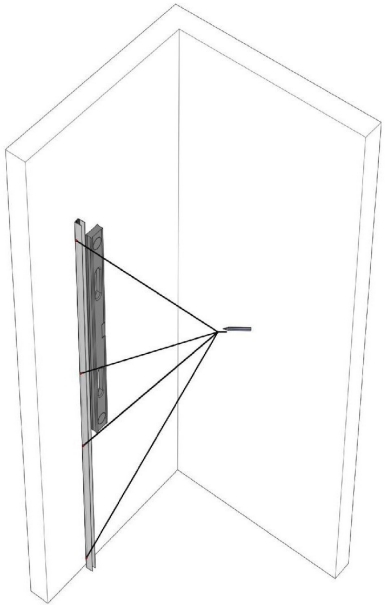

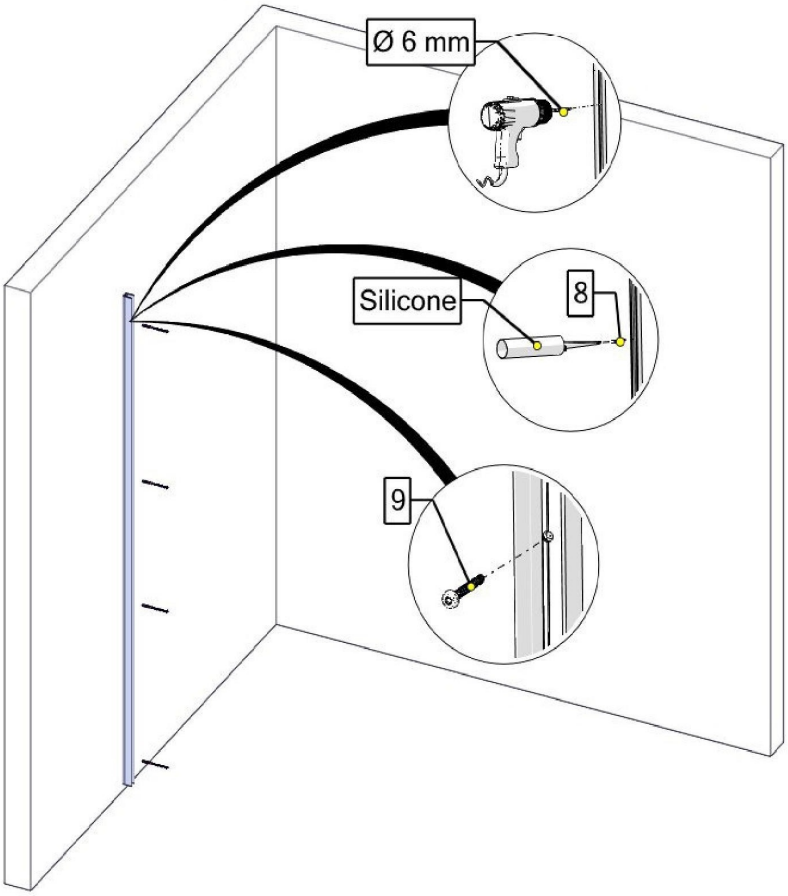
Ø 6 mm
Silicone
8
9

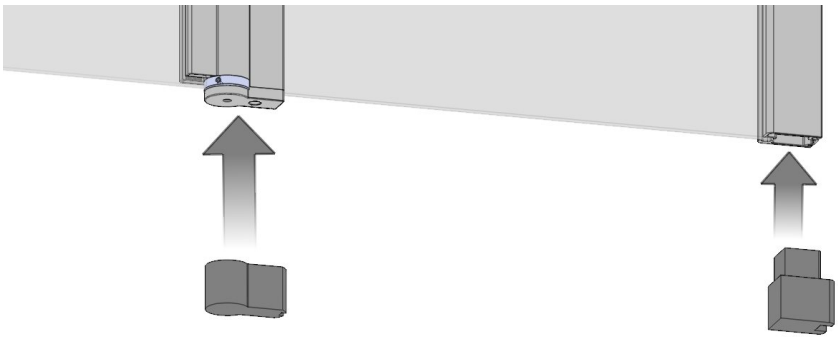

6
7

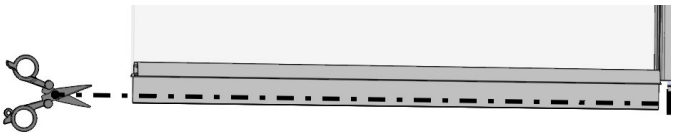

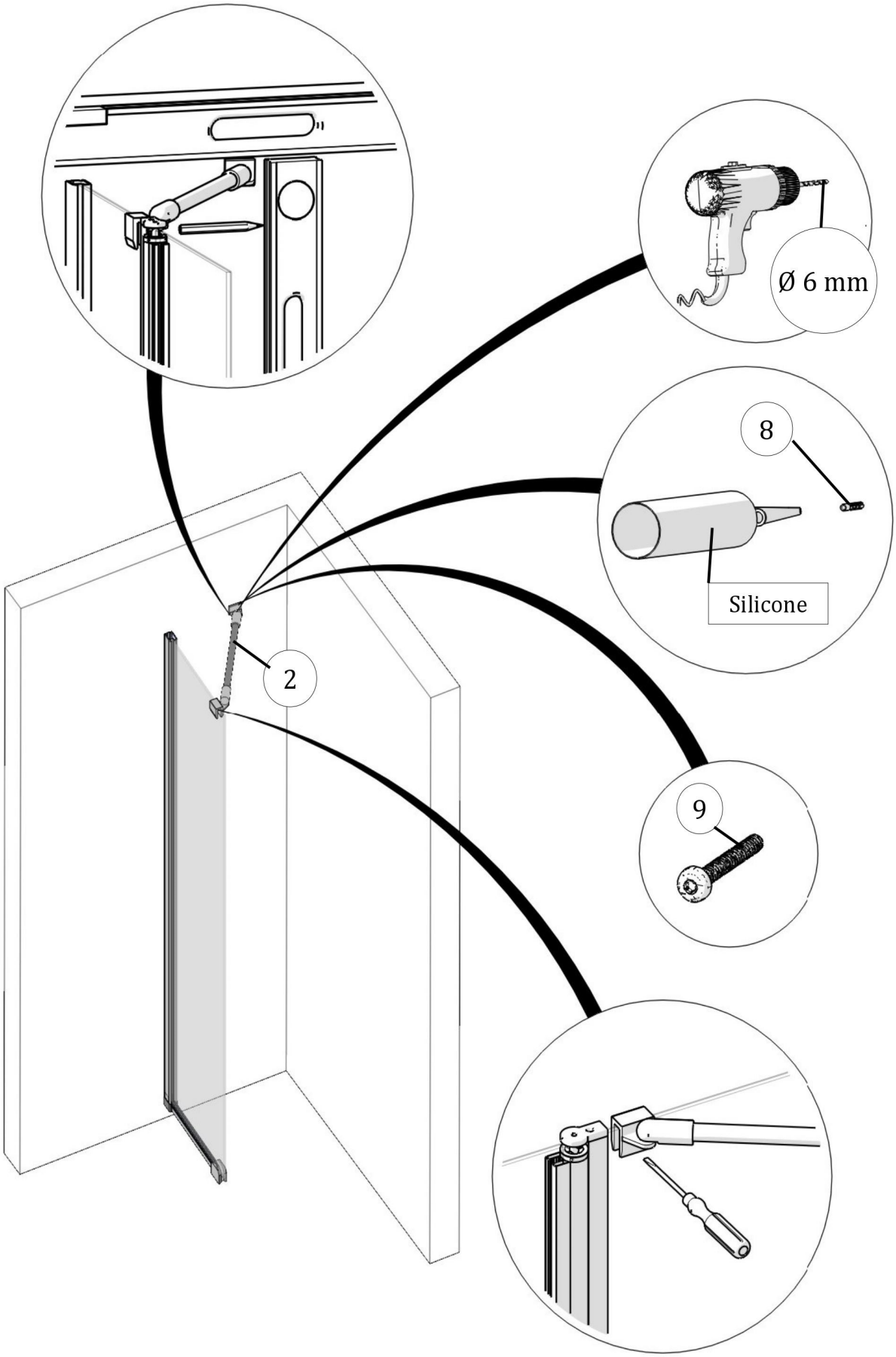
Ø 6 mm
8
Silicone
2
9

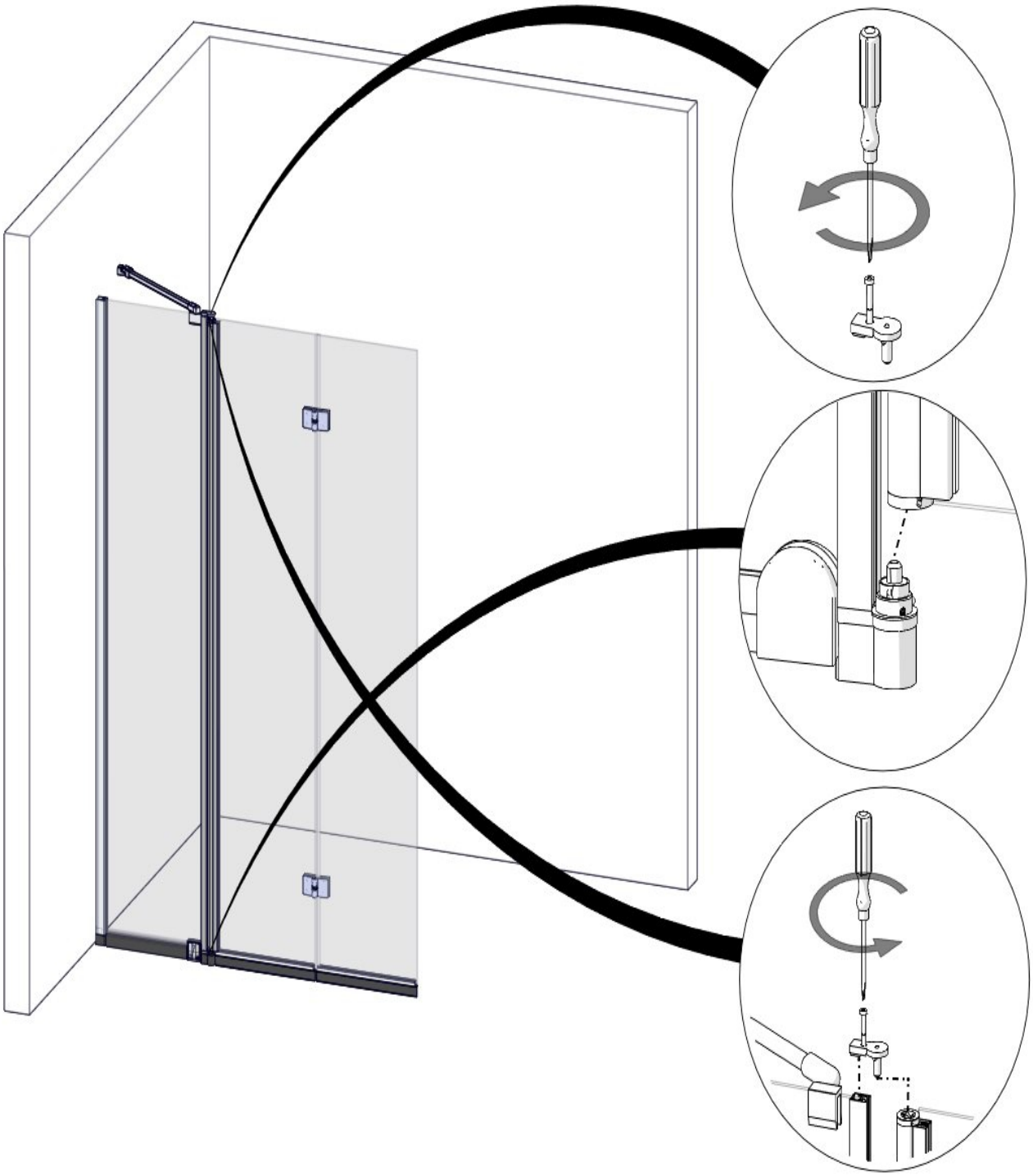

30X x 30X

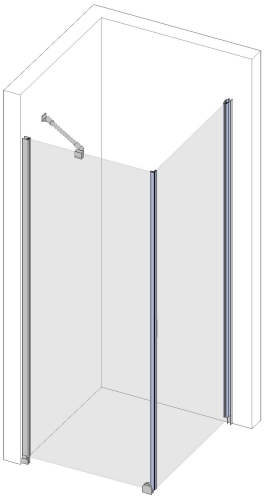

301 x 302

301 x 303

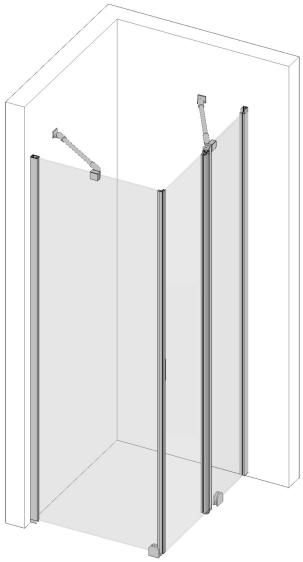

301 x 304

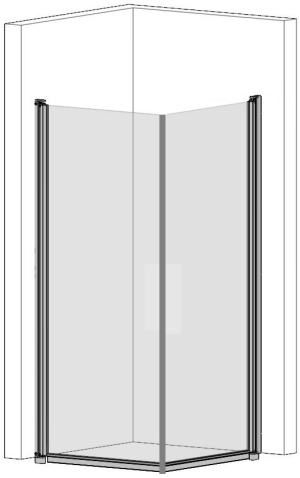

302 x 302

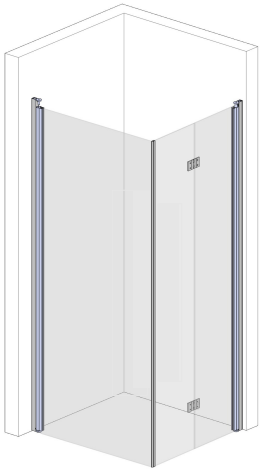

302 x 303

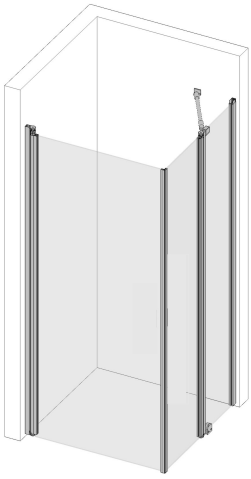

302 x 304

303 x 303

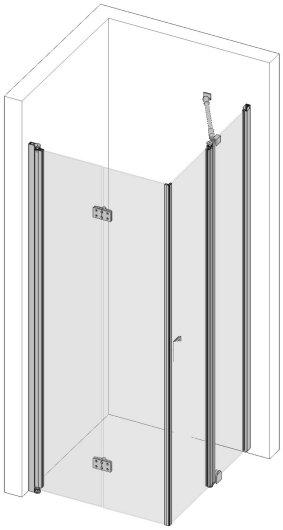

303 x 304

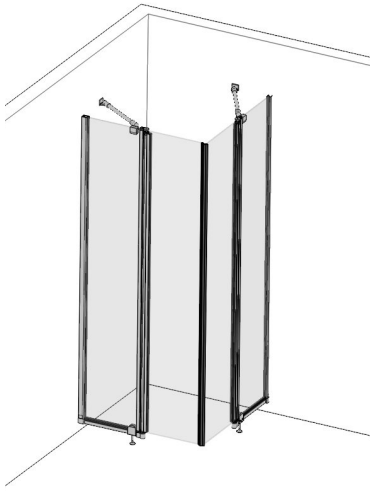

304 x 304

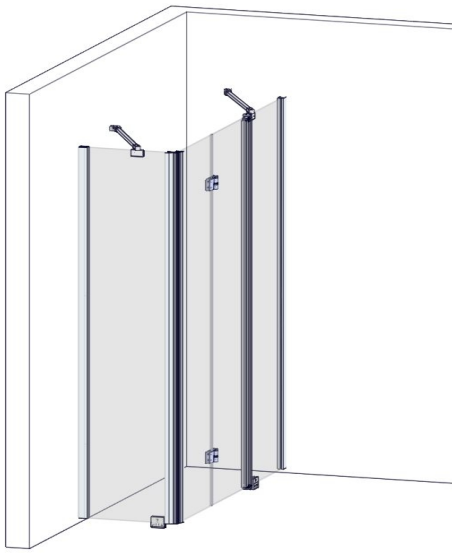

301 x 305

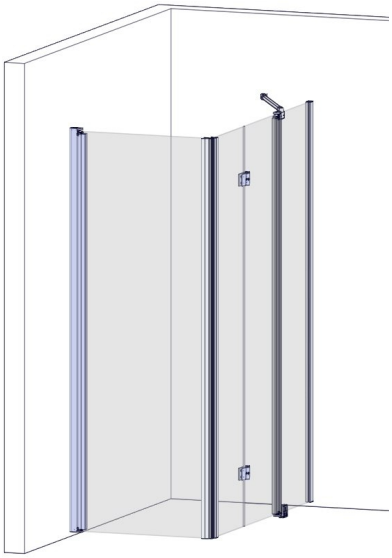

302 x 305

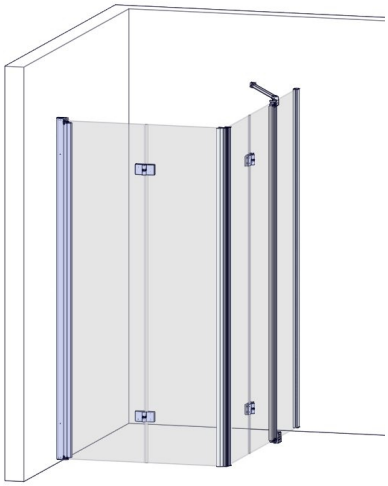

303 x 305

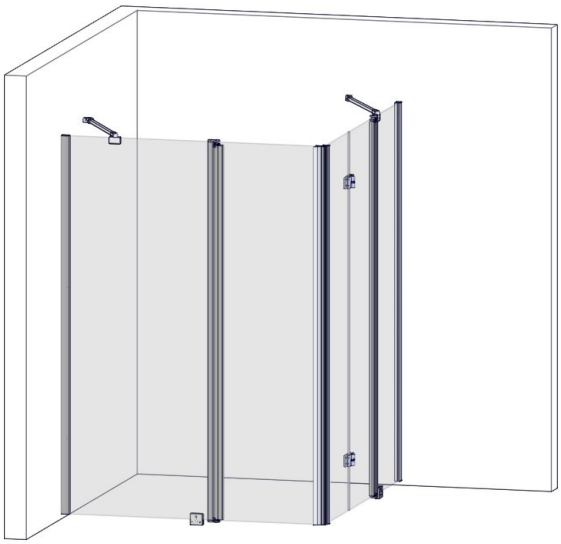

304 x 305

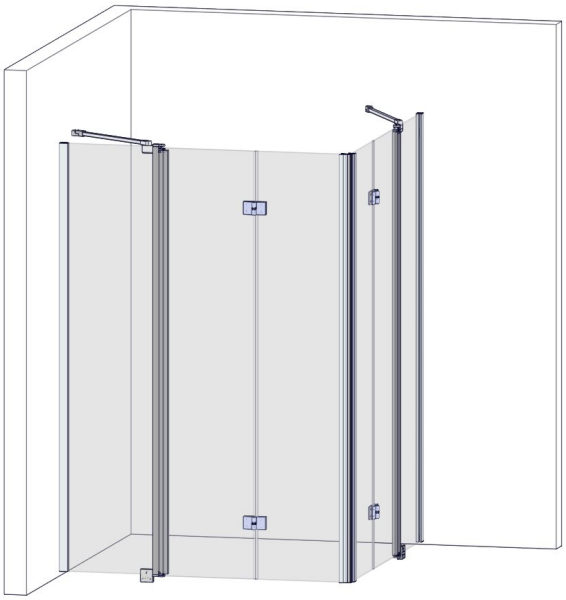

305 x 305

30X + 30X

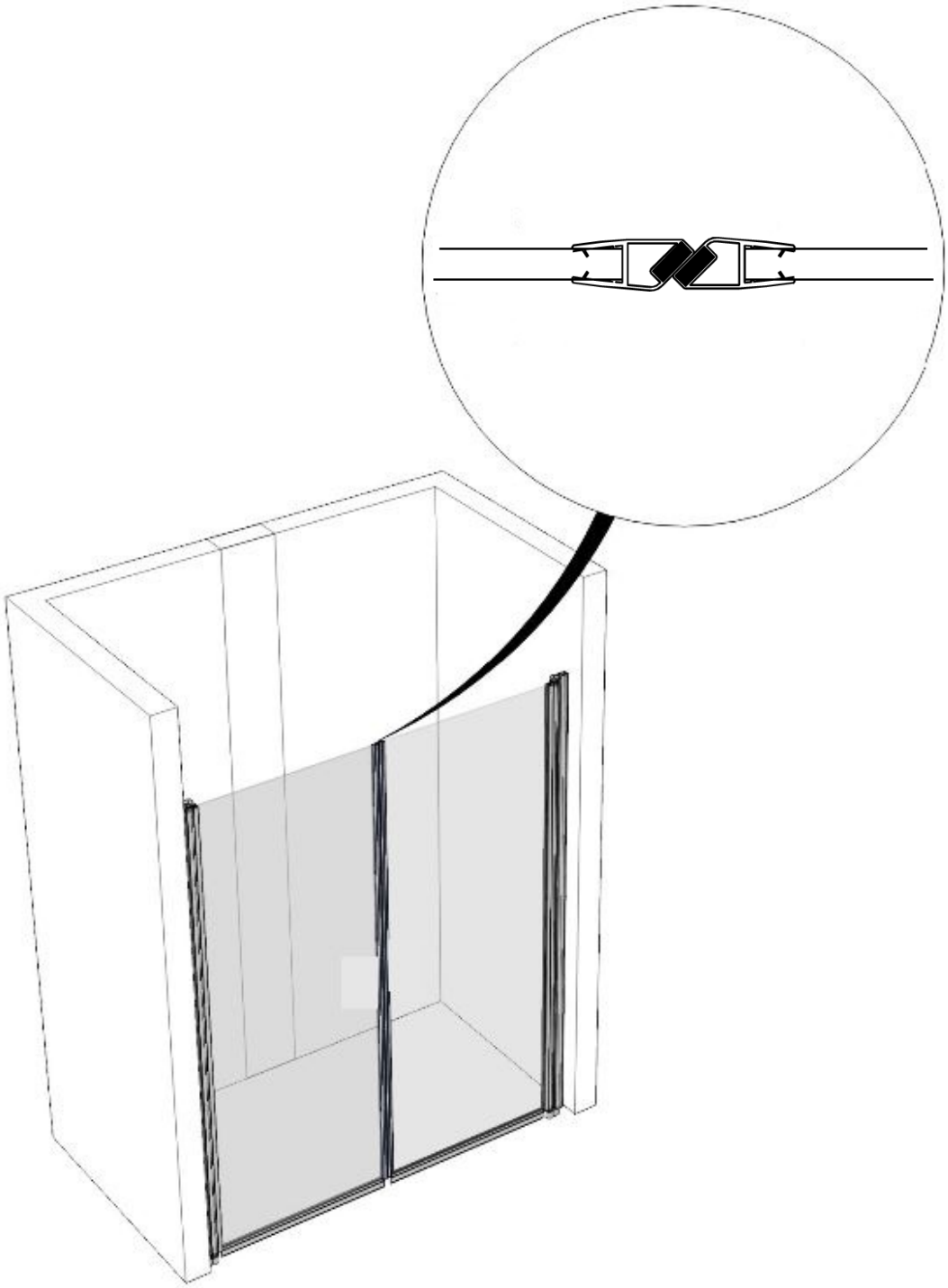

	301/304/305 + 301/304/305	301/304/305 + 302/303	302/303 + 302/303
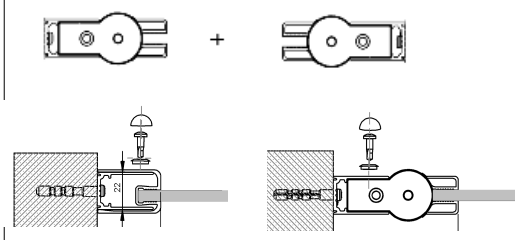	0-40 mm	0-35 mm	0-30 mm
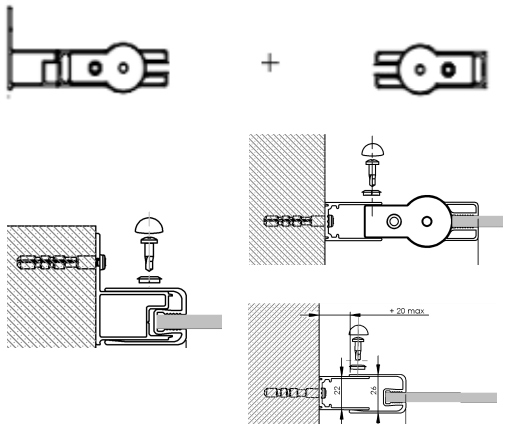	34-74 mm	34-69 mm	34-64 mm
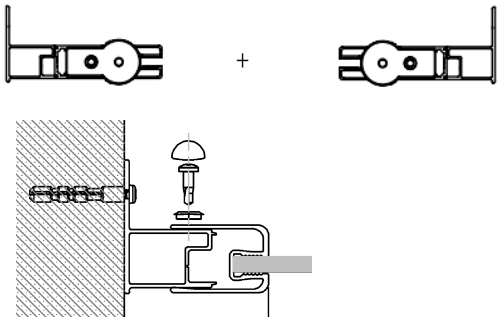	68-108 mm	68-103 mm	68-98 mm

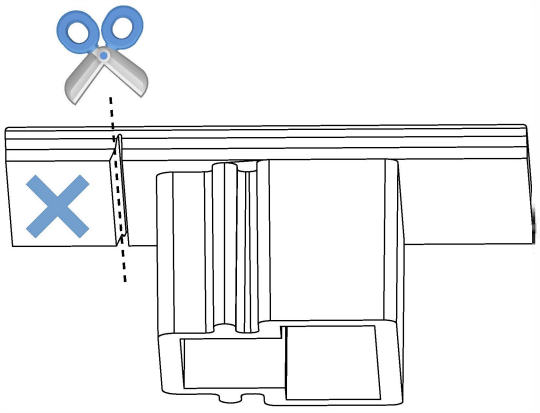

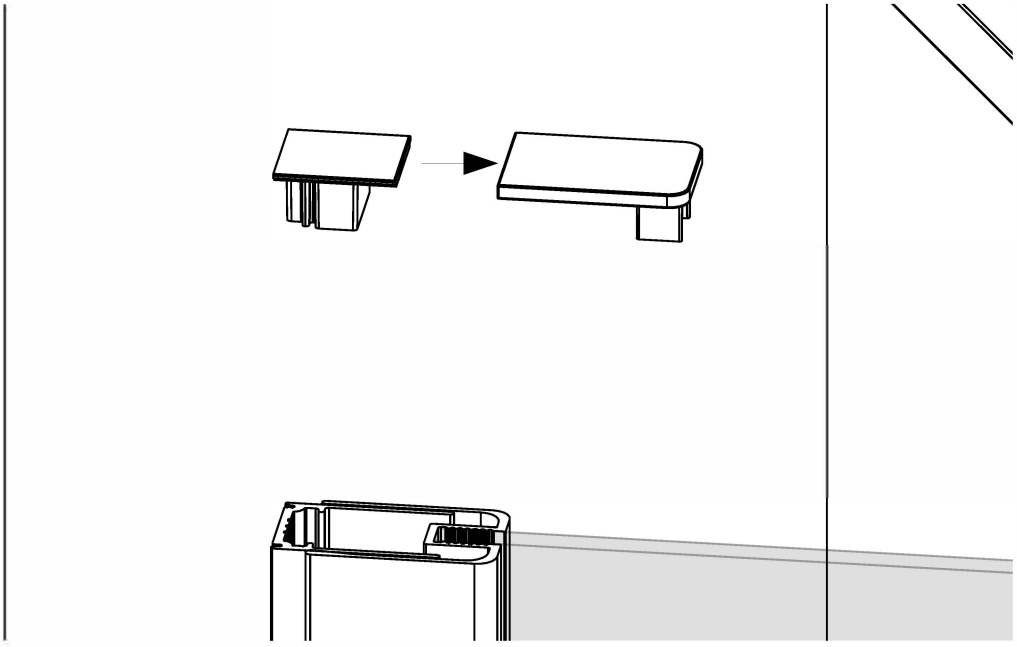

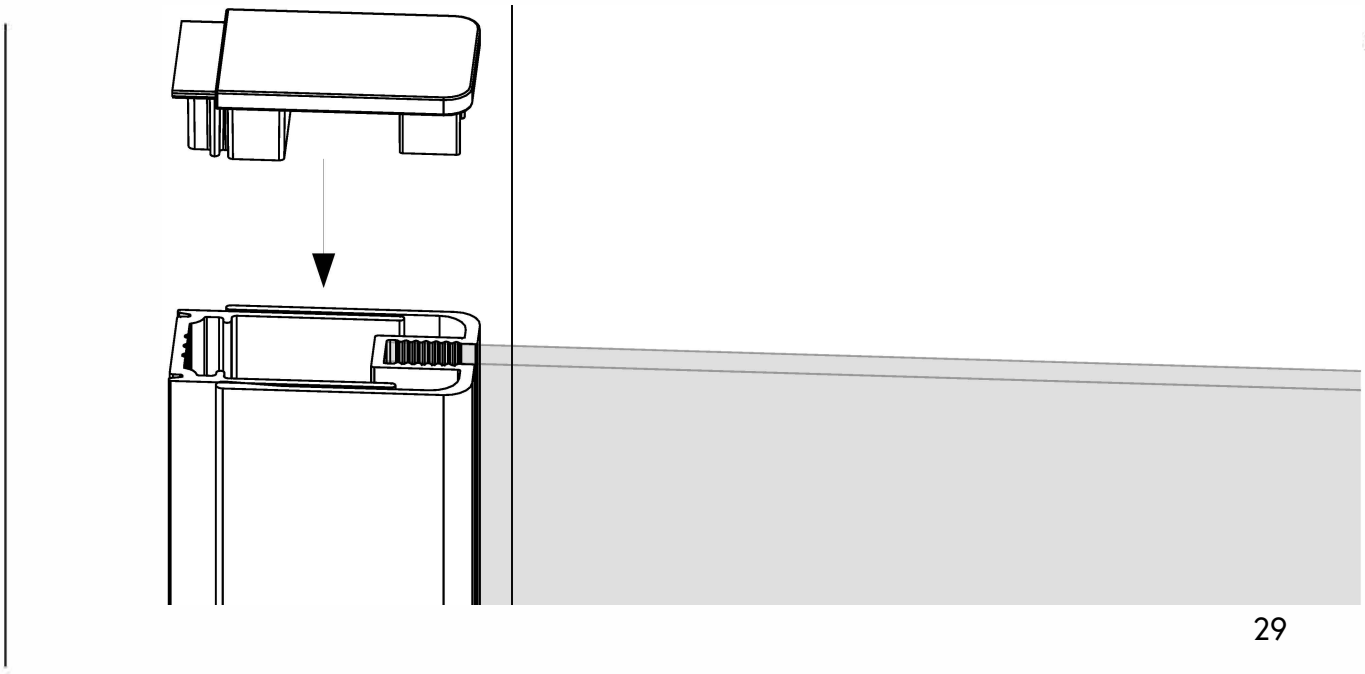

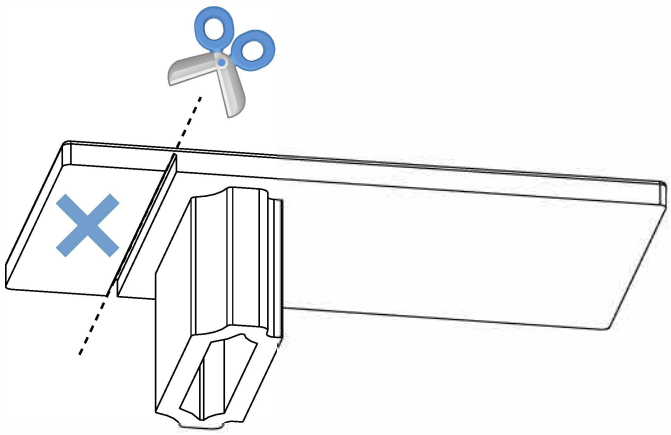

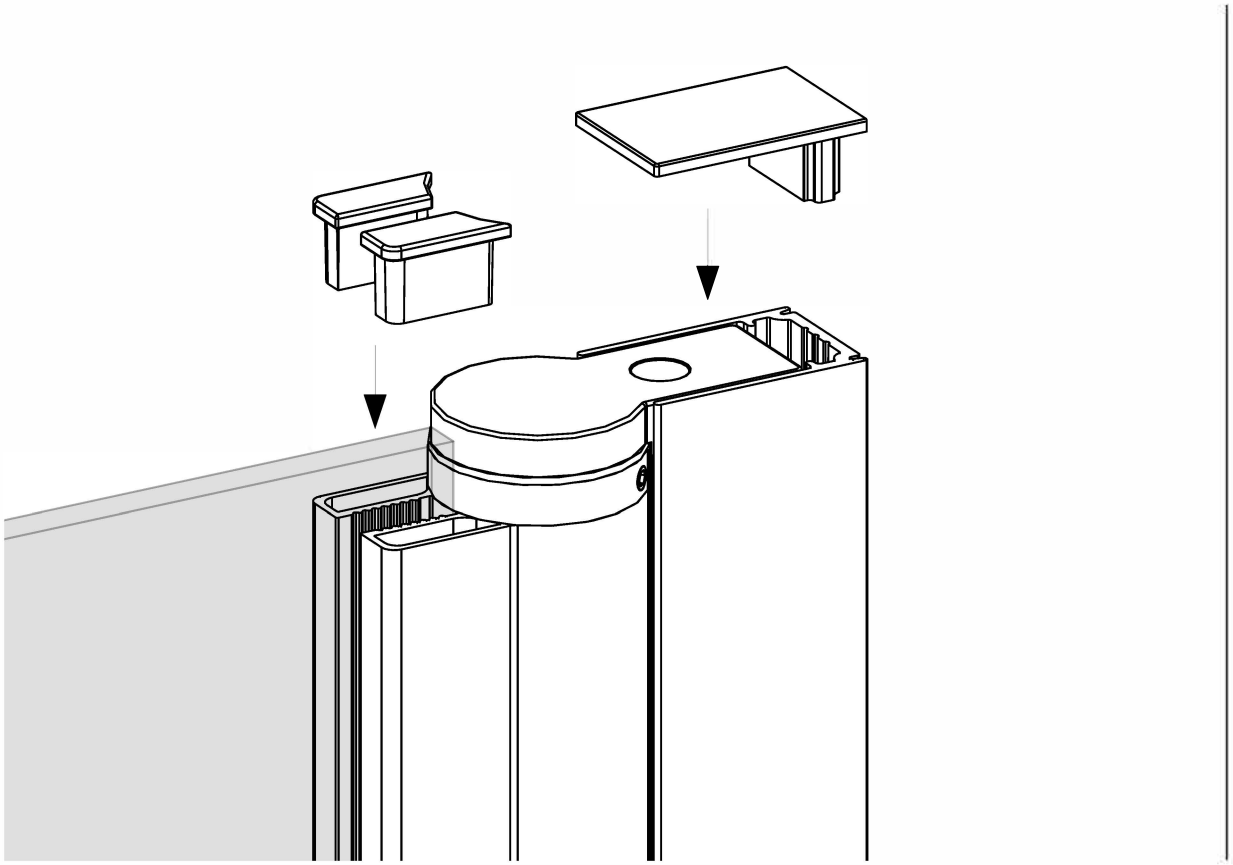

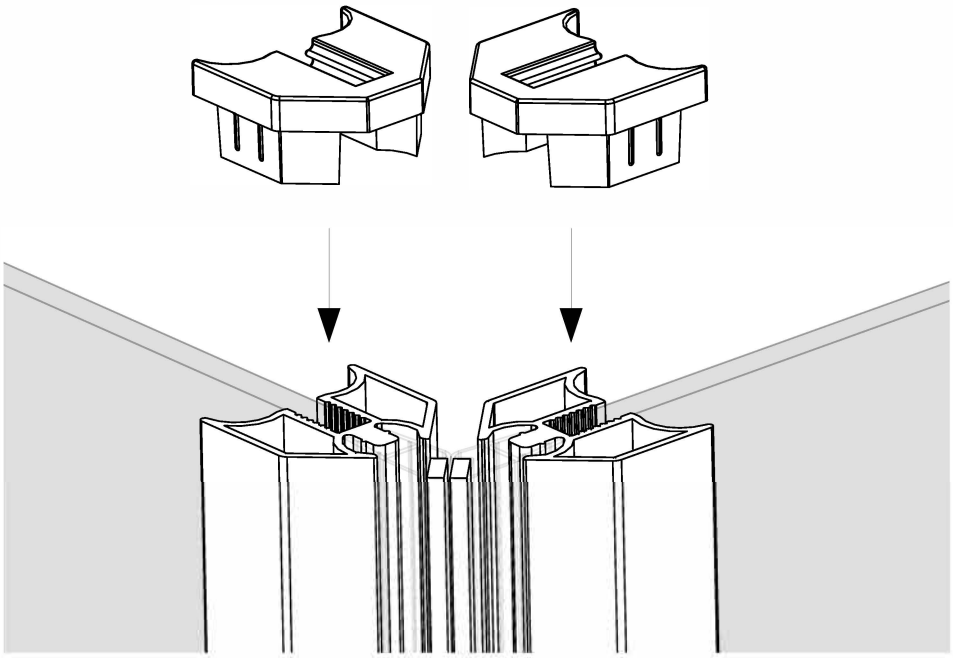

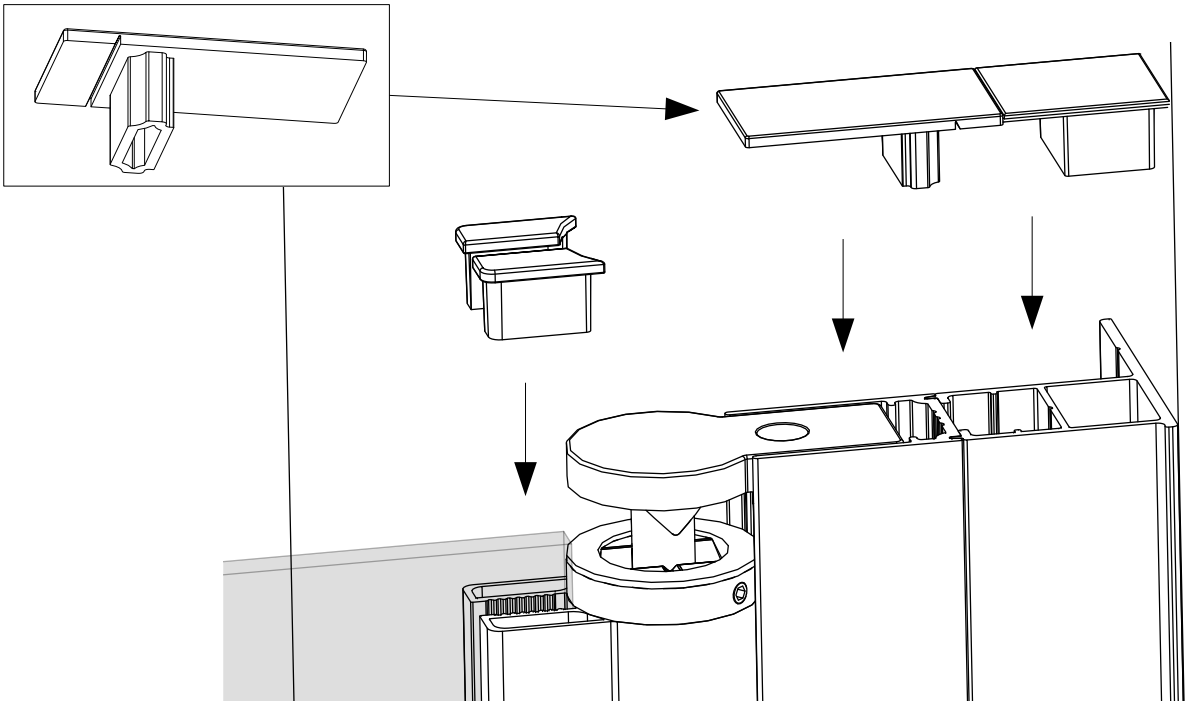

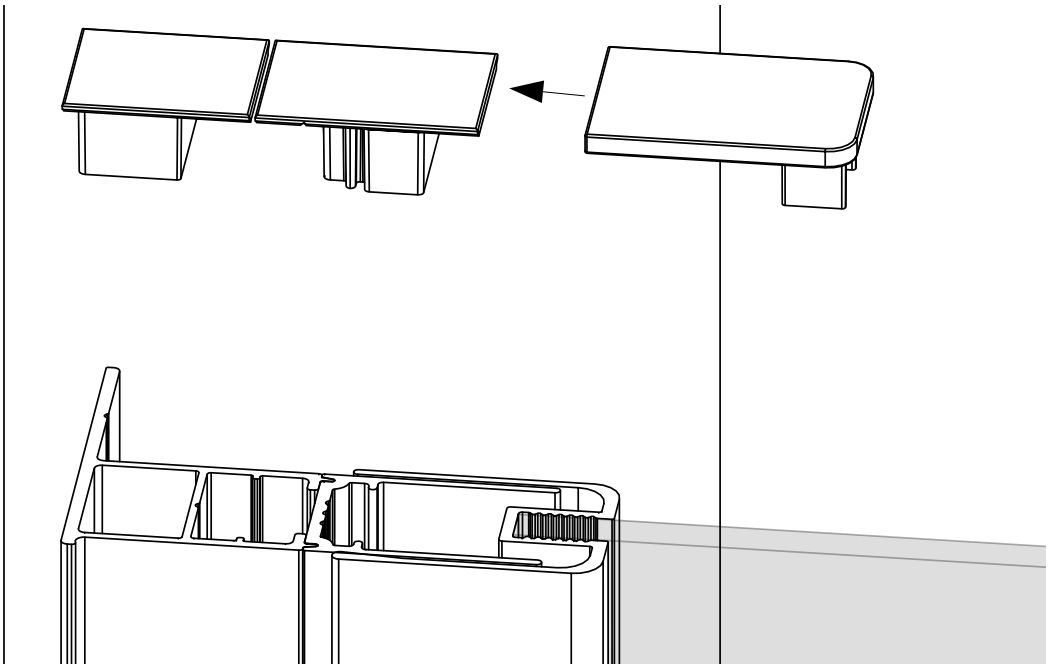

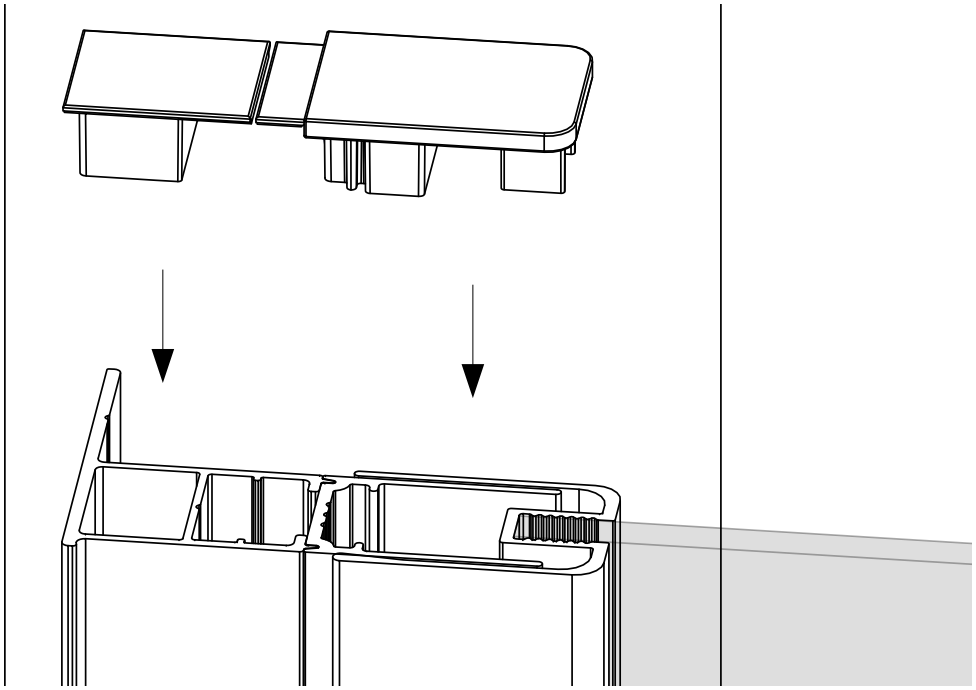

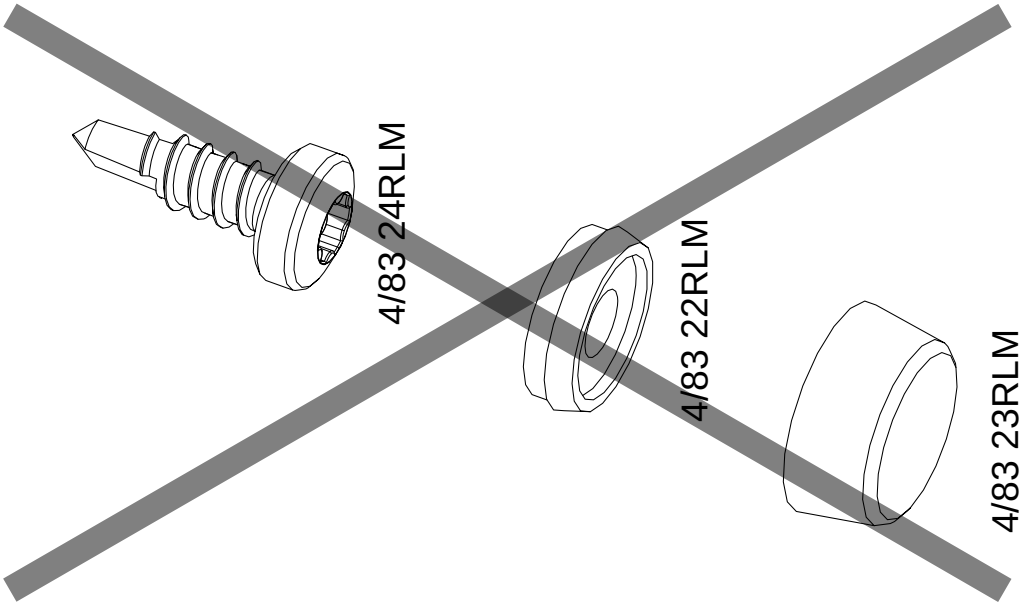
4/83 24RLM
4/83 22RLM
4/83 23RLM

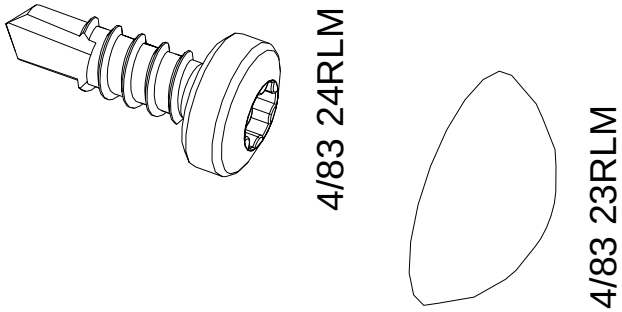
4/83 24RLM
4/83 23RLM